제 2014 - 25798 호

안 전 인 증 서

(사업장명) 극동호이스트(주)

(소 재 지(425-833)경기도 안산시 성곡동630-2 반월공단 B-607-14

위 사업장에서 제조하는 아래의 품목이 산업안전보건법 제34조 및 같은 법 시행규칙 제58조의4제4항에 따른 안전인증 심사 결과 안전·보건기준에 적합하므로 안전인증표시의 사용을 인증합니다.

품 목

호이스트

형식,모델(용량,등급)/인증번호

KDC1-DL (1Ton) /14-AQ2AC-02274

인 증 기 준

고용노동부 고시 제2012 - 33호 (위험기계,기구 의무안전인증 고시)

인 증 조 건

인증유효기간 :

2014년 07월 11일

한국산업안전보건공단이사장

심사결과 통지서

신청인	사업장명	극동호이스트(주)	사업장관리번호	134-81-013350
	사업자등록번호	134-81-01335	대표자 성명	최성찬
	소재지	(425 - 833) 경기도 안산시 성곡동630-2 반월공단 B-607-14		

안전인증대상 기계·기구명	호이스트		
형 식 (규 격)	KDC1-DL	용 량 (등 급)	1 Ton

산업안전보건법 제 34조 및 같은 법 시행규칙 제58조의4에 따라 실시한

[ ] 예비심사

[√] 서면심사

[ ] 기술능력 및 생산체계 심사

[ ] 개별 제품심사

[ ] 개별 제품심사(제작중)

[ ] 형식별 제품심사

결과가 [√] 적 합 / [ ] 부적합 함을 통지합니다.

2014년 07월 07일

인증심사원 강성두 변명수 (서명 또는 인)

한국산업안전보건공단 경기서부지사장

불법복제 및 배포금지

서 면 심 사 서 류

형식 번호 : KDC1 - DL

극 동 호 이 스 트 (주)

工場 : 경기도 안산시 단원구 해봉로 119 (성곡동)

電話 : 031) 491 - 5311

FAX : 031) 494 - 5315

심사필

KCS

한국산업안전보건공단

산업재해예방

안전보건공단

KOREA OCCUPATIONAL SAFETY & HEALTH AGENCY

192.168.11.174 / 2014-07-10 09:38:55

불법복제 및 배포금지

동 일 형 식 일 람 표

사업장명	극동호이스트㈜	개정일자 및 번호		2014년 06월 25일	인증번호	
형식 및 모델		동일 형식 인정범위 및 내역				비 고
형식	모델	권상속도(m/min)	횡행속도(m/min)	양정(m)	횡행방식	
KDC1-DL	KDC1-L6-DL	고속: 12M/MIN CREEP: 1.2M/MIN	고속:24M/MIN 저속:16M/MIN	6	모터구동식	
	KDC1-L9-DL			9		
	-			-		

산업재해예방
안전보건공단
KOREA OCCUPATIONAL SAFETY & HEALTH AGENCY
192.168.11.174 / 2014-07-10 09:38:55

불법복제 및 배포금지

5) 방호장치의 성능검사 합격증 사본

검사필
KCS
한국산업안전보건공단

산업재해예방
안전보건공단
KOREA OCCUPATIONAL SAFETY & HEALTH AGENCY

192.168.11.174 / 2014-07-10 09:38:55

불법복제 및 배포금지

제 2012-BJ-0009 호

안 전 인 증 서

정호엔지니어링

경기도 광명시 노동사동 440-5

위 사업장에서 제조하는 아래의 품목이 산업안전보건법 제34조 및 같은 법 시행규칙 제58조의4제4항에 따른 안전인증 심사 결과 안전·보건기준에 적합하므로 안전인증표시의 사용을 인증합니다.

품 목

양중기용 과부하방지장치

형식·모델/용량·등급/인증번호

형식·모델	용량·등급	인증번호
JDL-100	J-2	12-AV2BJ-0009

인 증 기 준

방호장치 의무안전인증 고시(고용노동부고시 제2010-36호)

인 증 조 건

아래 주소에서 생산되는 제품에 한함.

정호엔지니어링, 경기도 광명시 노동사동 440-5

2012년 06월 11일

한국산업안전보건공단 이사장

산업재해예방
안전보건공단
KOREA OCCUPATIONAL SAFETY & HEALTH AGENCY

192.168.11.174 / 2014-07-10 09:38:55

불법복제 및 배포금지

Ⅱ. 도 면

심사필
KCS
한국산업안전보건공단

산업재해예방
안전보건공단
KOREA OCCUPATIONAL SAFETY & HEALTH AGENCY

192.168.11.174 / 2014-07-10 09:38:55

불법복제 및 배포금지

1) 기　　계

심사필
KCS
한국산업안전보건공단

산업재해예방
안전보건공단
KOREA OCCUPATIONAL SAFETY & HEALTH AGENCY

192.168.11.174 / 2014-07-10 09:38:55

불법복제 및 배포금지

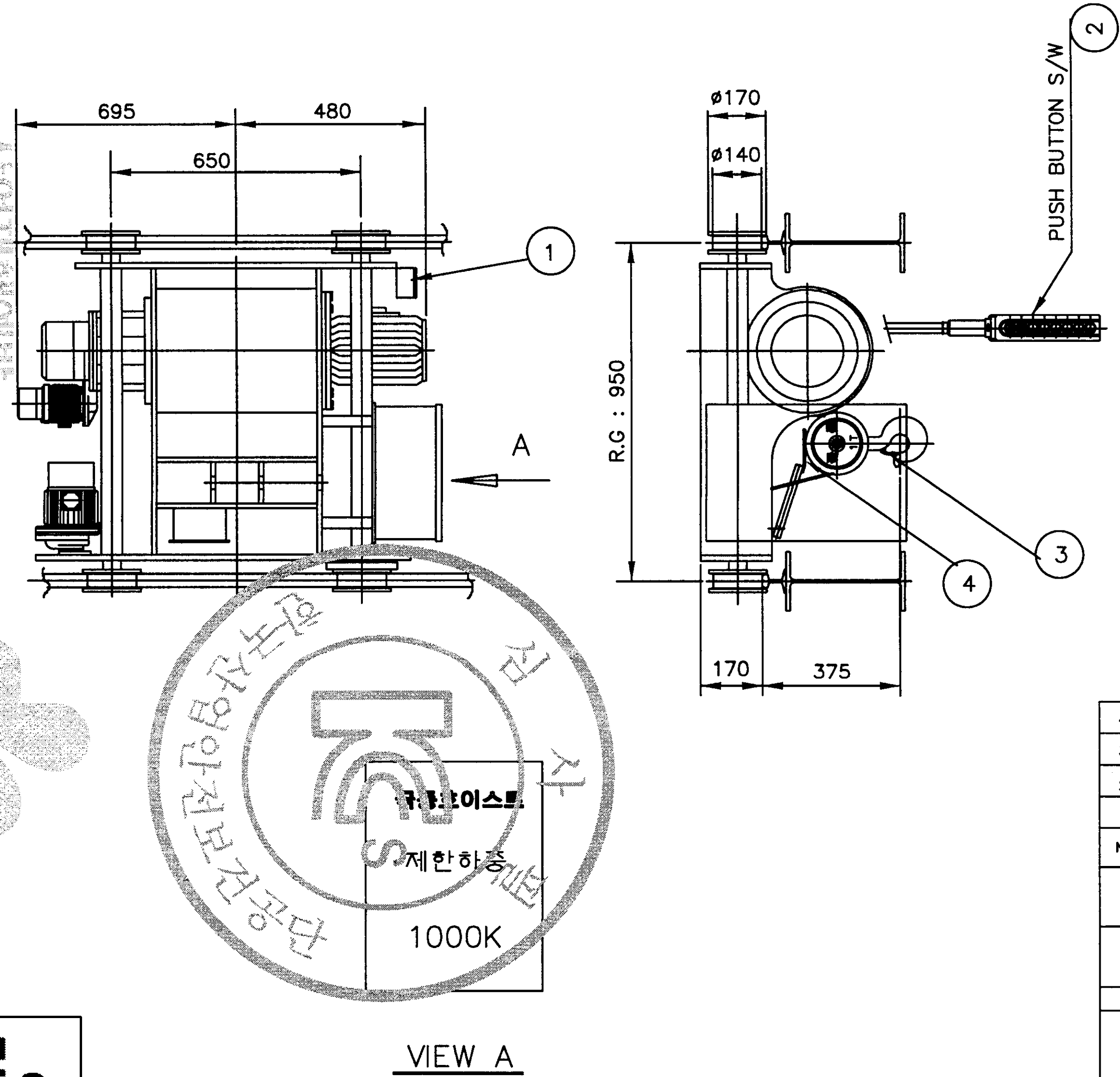

SPECIFICATION			
RATED LOAD			1000 KG
TESTING LOAD			1250 KG
LIFT			6 M
RATING			30 MIN
HOISTING	HIGH	SPEED	12/1.2 M/MIN
		MOTOR	2.4/0.4 KW x 4 P
TRAVERSING	HIGH	SPEED	24 M/MIN
		MOTOR	0.75 KW x 4 P
	LOW	SPEED	16 M/MIN
		MOTOR	0.5 KW x 6 P
WIRE ROPE			(6x19) ø6 x 4 FALLS
POWER SOURCE			AC3ø 220V(380,440,460,480)V 60Hz
COLOR			10 B 3/5
WEIGHT			375 KG

NO.	DESCRIPTION	MT'L	QTY SUB	QTY TOTAL	WEIGHT(Kg) SUB	WEIGHT(Kg) TOTAL	REMARKS.
4	UPPER LIMIT S/W	SS400		1			
3	SAFETY LATCH	SS400		1			
2	EMERGENCY S/W	—		1			
1	LOAD LIMITER	—		1			

PROJECT		DATE	DIM mm
TITLE	KDC 1 DL (6M) ARRANGEMENT DRAWING FOR HOIST	SCALE A3/15	PROJECTION 3rd

DRAWN	DESIGNED	CHECKED	APPROVED	REF. DRAWING

극동호이스트 주식회사 KUK DONG HOIST CO., LTD.	SHEET No.	DWG No. KDC1DL600

심사 한국산업안전보건공단 극동호이스트 제한하중 1000K
산업재해예방 안전보건공단 KOREA OCCUPATIONAL SAFETY & HEALTH AGENCY
192.168.11.174 / 2014-07-10 09:38:55

불법복제 및 배포금지

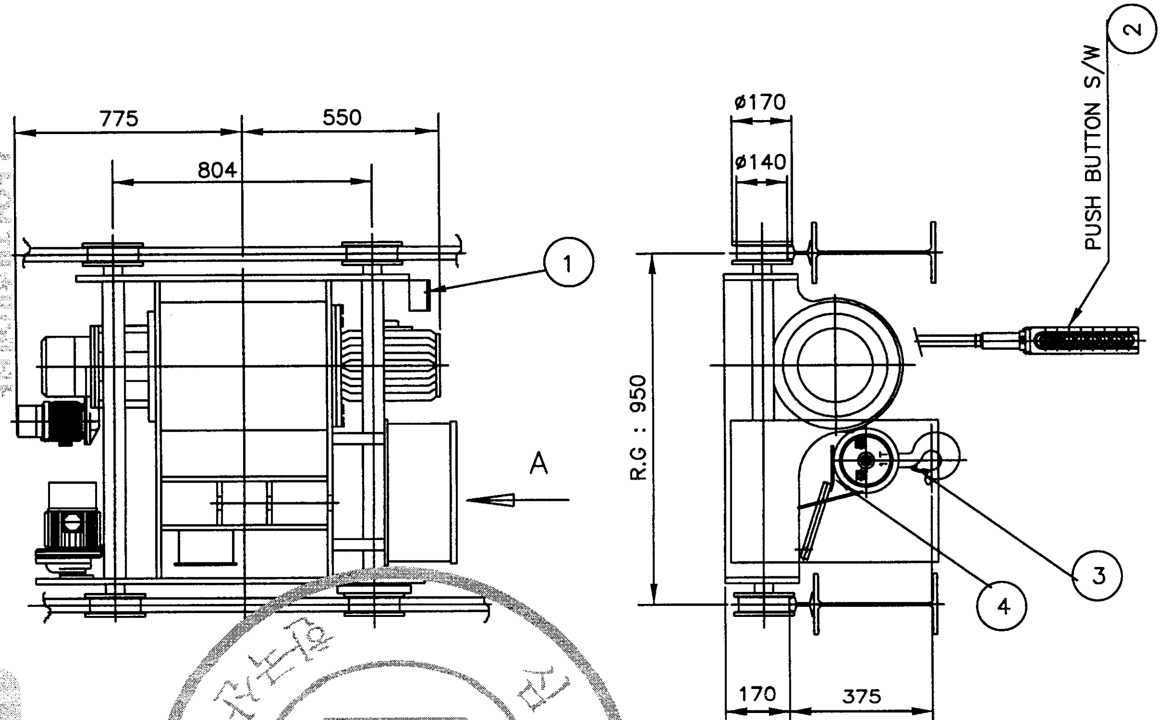

VIEW A

SPECIFICATION			
RATED LOAD			1000 KG
TESTING LOAD			1250 KG
LIFT			9 M
RATING			30 MIN
HOISTING	HIGH	SPEED	12/1.2 M/MIN
		MOTOR	2.4/0.4 KW x 4 P
TRAVERSING	HIGH	SPEED	24 M/MIN
		MOTOR	0.75 KW x 4 P
	LOW	SPEED	16 M/MIN
		MOTOR	0.5 KW x 6 P
WIRE ROPE			(6x19) ø6 x 4 FALLS
POWER SOURCE			AC3ø 220V(380,440,460,480)V 60Hz
COLOR			10 B 3/5
WEIGHT			425 KG

NO.	DESCRIPTION	MT'L	QTY SUB	QTY TOTAL	WEIGHT(Kg) SUB	WEIGHT(Kg) TOTAL	REMARKS.
4	UPPER LIMIT S/W	SS400		1			
3	SAFETY LATCH	SS400		1			
2	EMERGENCY S/W	—		1			
1	LOAD LIMITER	—		1			

PROJECT			DATE	DIM
				mm
TITLE	KDC 1 DL (9M) ARRANGEMENT DRAWING FOR HOIST		SCALE	PROJECTION
			A3/15	3rd
DRAWN	DESIGNED	CHECKED	APPROVED	REF. DRAWING
극동호이스트 주식회사 KUK DONG HOIST CO., LTD.		SHEET No.	DWG No.	KDC1DL900

심사 한국산업안전보건공단 극동호이스트 제한하중 1000K

산업재해예방 안전보건공단
KOREA OCCUPATIONAL SAFETY & HEALTH AGENCY
192.168.11.174 / 2014-07-10 09:38:55

불법복제 및 배포금지

2) 전　　기

심사필
KCS
한국산업안전보건공단

산업재해예방
안전보건공단
KOREA OCCUPATIONAL SAFETY & HEALTH AGENCY

192.168.11.174 / 2014-07-10 09:38:55

불법복제 및 배포금지

1	2	3	4	5	6	7	8	9	10	11	12	13	14	15	16	17	18	19	20

ADR'S NO.

ELECTRICAL SYMBOL LIST

DESCRIPTION	SYMBOLS
3 PHASE SQUIRREL CAGE ROTOR INDUCTION MOTOR	IM
3 PH... WOUND ROTOR INDUCTION MOTOR	
DC. MAG. BRAKE ...K ...	
THRUSTOR BRAKE	B-TH
C-DC MAG. BRAKE	B-MD
SC ...	B-SC
...	B-EC
RECTIFIER	
LOAD LIMIT ELECTRICAL ...	
ELE... CURRENT ...	

DESCRIPTION	SYMBOLS
NO FUSE BREAKER 2 PHASE	
NO FUSE BREAKER 3 PHASE	
EARTH LEAKAGE BREAKER 2 PHASE	
EARTH LEAKAGE BREAKER 3 PHASE	
TRANSFORMER	
CURRENT TRANSFORMER	
POTENTIAL TRANSFORMER	
FUSE	
FUSE WITH C...	
THYRISTOR UNIT	

DESCRIPTION	SYMBOLS MAKE	SYMBOLS BREAK
MAGNETIC & RELAY CONTACTOR		
ON DELAY TIME CONTACTOR		
OFF DELAY TIME CONTACTOR		
EOCR OR THERMAL RELAY CONTACTOR		
THERMOSTAT	T	T
LIMIT SWITCH		
PUSHBUTTON SWITCH		
EMERGENCY PUSHBUTTON SWITCH		
KEY SWITCH		
FOOT SWITCH		

DESCRIPTION	SYMBOLS MAKE	SYMBOLS BREAK
PUSHBUTTON SWITCH 1BUTTON 2STEP TYPE		
TOGGLE SWITCH OR SELLECTOR SWITCH		

MK	DATE	REVISIONS	CHK.	APP.

CUSTOMER		DRAWING	DESIGN	CHECKED	APPROVED	SCALE	DATE	ORDER NO.
DRAWING TITLE	SYMBOL LIST 1/2					NONE		
		극동호이스트 주식회사 KUK DONG HOIST CO., LTD.				DWG. NO	KDSM0001	

산업재해예방 안전보건공단
KOREA OCCUPATIONAL SAFETY & HEALTH AGENCY
192.168.11.174 / 2014-07-10 09:08:56

불법복제 및 배포금지

1	2	3	4	5	6	7	8	9	10	11	12	13	14	15	16	17	18	19	20

ADR'S NO.

ELECTRICAL SYMBOL LIST

DESCRIPTION	SYMBOLS	DESCRIPTION	SYMBOLS	DESCRIPTION	SYMBOLS	DESCRIPTION	SYMBOLS
WIRE INTERNAL TO ENCLOSURE		CONTROLLER OR REMOTE CONTROLLER CONTACTOR		SOLENOID COIL		FLOOD LIGHTING	
WIRE EXTERNAL TO ENCLOSURE		UPPER LIMIT SWITCH (LS-II)		RESISTER		RECEPTACLE	
WIRE NOT CONNECTED		THERMAL RELAY		VARIABLE RESISTOR			
WIRE CONNECTED		PILOT(SIGNAL) LAMP		SLIP RING			
TERMINAL		ROTARY LAMP		CABLE REEL			
GROUND (EARTH)		WARING SIREN		SPACE HEATER			
PLUG & RECEPTACLE		BUZZER		SURGE ABSORBER			
MAGNETIC CONTACTOR COIL	M	AMMETER	A AC, A DC	LOAD CELL			
AUX. RELAY	CR	VOLT METER	V AC, V DC	BALLAST WITH RECEPTACLE			
TIMER		FLUORESCENT LAMP		FAN			

MK	DATE	REVISIONS	CHK.	APP.	CUSTOMER		DRAWING	DESIGN	CHECKED	APPROVED	SCALE	DATE	ORDER NO.
					DRAWING TITLE	SYMBOL LIST 2/2					NONE		
							극동호이스트 주식회사 KUK DONG HOIST CO., LTD.				DWG. NO	KDSM0002	

산업재해예방 안전보건공단
KOREA OCCUPATIONAL SAFETY & HEALTH AGENCY
한국산업안전보건공단
192.168.11.174 / 2014-07-10 09:38:58

ELECTRICAL SPECIFICATION

. POWER SOURCE : AC 3Φ 220V, 380V, 440V ,460V,480V 60Hz
. CONTROL SOURCE : AC 1Φ 110V(120V) 60Hz

SUBJECT		MOTOR OUTPUT	220V		380V		440V	460V	480V	440,460,480V	BRAKE	REMARK
			STATOR CURRENT	1st CABLE SIZE	STATOR CURRENT	1st CABLE SIZE	STATOR CURRENT	STATOR CURRENT	STATOR CURRENT	1st CABLE SIZE		
MAIN HOIST		2.4KW x 4P 30 MIN	10.0 A	4.0 sq	2.8 A	4.0 sq	5.0 A	4.8 A	4.6 A	4.0 sq	DC MAG. BRAKE	
CREEP HOIST		0.4KW x 4P 30 MIN	2.7 A	4.0 sq	1.6 A	4.0 sq	1.4 A	1.3 A	1.2 A	4.0 sq	DC MAG. BRAKE	
TRAVERSING	HIGH	0.75KW x 4P 30 MIN	4.1 A	4.0 sq	2.4 A	4.0 sq	2.0 A	2.0 A	1.9 A	4.0 sq	DC MAG. BRAKE	1 DRIVE
	LOW	0.5KW x 6P 30 MIN	3.4 A	4.0 sq	2.0 A	4.0 sq	1.7 A	1.7 A	1.6 A	4.0 sq	DC MAG. BRAKE	1 DRIVE
CONTROL CIRCUIT			2 A	2.5 sq	2 A	2.5 sq	2 A	2 A	2 A	2.5 sq		
LIGHTING & ACC'Y CIRCUIT												
SUB TOTAL (PEAK LOAD)		HIGH	16.1 A	4.0 sq	7.2 A	4.0 sq	9.0 A	8.8 A	8.5 A	4.0 sq	I(A)=M/H + T/S + ASS'Y	
SUB TOTAL (NORMAL LOAD)		LOW	15.4 A	4.0 sq	6.8 A	4.0 sq	8.7 A	8.5 A	8.2 A	4.0 sq	I(A)=M/H + T/S + ASS'Y	

*. 위 계산는 HIGH(MAX.)일때와 LOW(MIN.)일때만 계산한것임.
*. 위 계산은 LIFT 6,9M에 적용

192.168.11.174 / 2014-07-10 09:38:55

무단배포금지

불법복제 및 배포금지

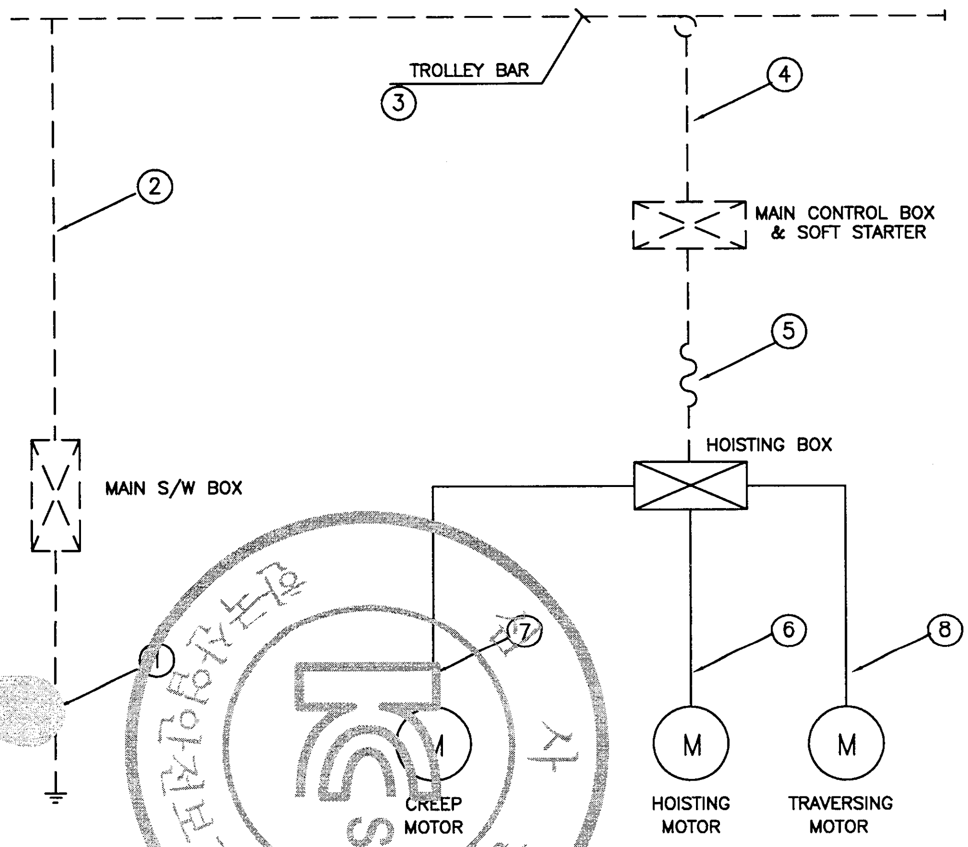

NO	DESCRIPTION	CABLE SIZE
1	MAIN EARTH LINE	USER SCOPE
2	POWER SOURCE	USER SCOPE
3	TROLLEY BAR	USER SCOPE
4	POWER SOURCE WITH EARTH	USER SCOPE
5	HOIST POWER SOURCE WITH EARTH	VCTF 4.0SQ x 1C
6	HOISTING MOTOR WITH EARTH	VCT 4.0SQ x 1C
7	CREEP MOTOR WITH EARTH	VCT 4.0SQ x 1C
8	TRAVERSING MOTOR WITH EARTH	VCT 4.0SQ x 1C

* CV CABLE 4C중 1C는 EARTH로 사용함.

– NOTE –

1. 전동기 외함, 제어반의 프레임 등은 접지하여 그 접지 저항은

400V 미만 : 100오옴 이하일것.(3종 접지)
400V 이상 : 10오옴 이하일것.(특 3종접지)

2.MAIN S/W BOX는 3종 접지 요.

등전위접지

1.전기장비와 기계의 노출된 모든 도전부는 보호본딩회로에 연결되어야 하며 적절한 접지연속성 기능이 유지되야함.

2. 보호본딩회로에는 개폐기, 과전류보호장치가 부착되지 않아야 한다.

시험대상 전선의 최소 유효단면적	최고전압강하(V)
1.0	3.3
1.5	2.6
2.5	1.6
4.0	1.4
>6.0	1.0

– – – – – – USER SCOPE

———— KUKDONG SCOPE

MK	DATE	REVISIONS	CHK.	APP.
1				
2				
3				
4				

CUSTOMER	
DRAWING TITLE	EARTH DETAILS DRAWING

DRAWING	DESIGN	CHECKED	APPROVED	SCALE	DATE	ORDER NO.
				NONE		

DWG. NO KDC1-EC001

KDC1-EC001

검사필 한국산업안전보건공단 KCS
산업재해예방 안전보건공단 KOREA OCCUPATIONAL SAFETY & HEALTH AGENCY
192.168.11.174 / 2014-07-10 09:38:55

불법복제 및 배포금지

▣ 보호본딩회로의 연속성 확인

시험전선의 최소유효 단면적(㎟)	최고 전압 강하(V)
1.0	3.3
1.5	2.6
2.5	1.9
4.0	1.4
>6.0	1.0

①보호본딩회로의 연속성의 검증은 PELV전원(50/60Hz)에서 최소 10A 이상의 전류를 10초 이상의 인가에 의한다. 시험은 PE단자와 보호본딩회로의 여러지점 사이에서 이루어진다.

②PE단자와 시험 지점 사이에서 측정된 전압은(표 참조) 값을 초과 해서는 아니된다.

▣ 절연저항 시험

전원선과 보호본딩선 사이를 직류 500V로 측정한 절연저항 값은 1MΩ 이상이어야 한다.

▣ 압 시험

①정격전압에서 작동되도록 설계된 전기장치의 회로를 제외한 모든 회로와 보호본딩회로의 전선 사이에 1초 이상 연속되는 다음의 시험 전압에 견딜수 있어야 한다.

- 장치의 정격전압의 두배 또는 1,000V 중 큰값의 전압

②이 시험을 견딜수 없도록 설계된 부품은 시험이 진행되기 전에 차단하여야 한다.

한국산업안전보건공단 KOREA OCCUPATIONAL SAFETY & HEALTH AGENCY
192.168.11.174 / 2014-07-10 09:36:35

1	2	3	4	5	6	7	8	9	10	11	12	13	14	15	16	17	18	19	20

ADR'S NO.

A4

KDC1DL-E234

* MAIN POWER : AC 3PH (220,380,440,460,480)V 60Hz LIFT 6,9M

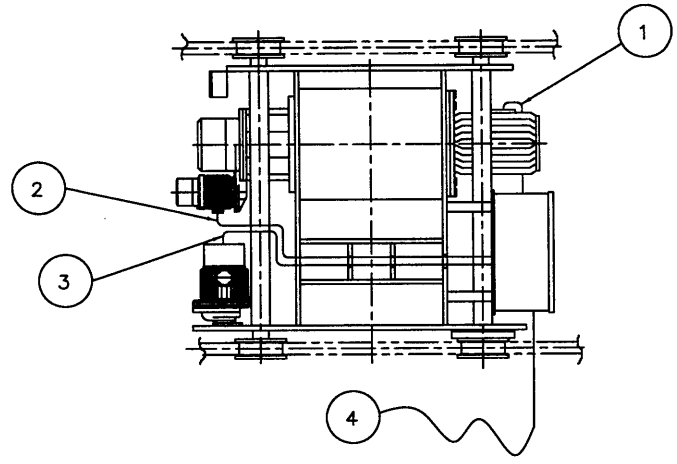

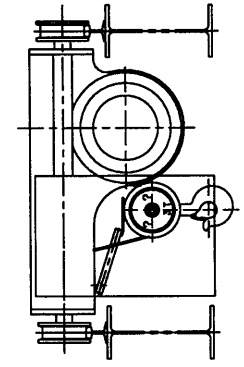

본 도면은 EARTH를 표기하기 위한 도면으로서
실제 배치와 다를 수 있으며 HOIST 본체와의
EARTH용 CABLE은 REFERENCE임

*3종 접지공사 100Ω 이하 (AC 3PH 400V 미만)
*특3 종 접지공사 10Ω 이하 (AC 3PH 400V 이상)

	TYPE	CABLE SIZE				REMARK
		220V	380V	TYPE	440V,460V,480V	
1	VCT	4.0sqx4c	4.0sqx5c	VCT	4.0sqx5c	HOISTING MOTOR WITH EARTH
2	VCT	4.0sqx5c	4.0sqx5c	VCT	4.0sqx5c	CREEP MOTOR WITH EARTH
3	VCT	4.0sqx4c+2.0sqx3C		VCT	4.0sqx4c+2.0sqx3C	T/S MOTOR WITH EARTH
4	VFCT	4.0sqx4c	4.0sqx4c	VFCT	4.0sqx4c	MAIN POWER WITH EARTH

등전위접지

1.전기장비와 기계의 노출된 모든 도전부는 보호본딩회로에 연결되어야 하며 적절한 접지연속성 기능이 유지되야함.

2. 보호본딩회로에는 개폐기, 과전류보호장치가 부착되지 않아야 한다.

시험대상 전선의 최소 유효단면적	최고전압강하(V)
1.0	3.3
1.5	2.6
2.5	1.6
4.0	1.4
>6.0	1.0

MK	DATE	REVISIONS	CHK.	APP.
4				
3				
2				
1				

CUSTOMER		DRAWING	DESIGN	CHECKED	APPROVED	SCALE	DATE	ORDER NO.
DRAWING TITLE	KDC1-DL					NONE		
	CABLE 사양	극동호이스트 주식회사 KUK DONG HOIST CO., LTD.				DWG. NO	KDC1DL-E234	

산업안전보건연구원 KOREA OCCUPATIONAL SAFETY & HEALTH AGENCY
192.168.11.174 / 2014-07-10 09:38:55
무단배포금지

불법복제 및 배포금지

1	2	3	4	5	6	7	8	9	10	11	12	13	14	15	16	17	18	19	20

ADR'S NO. A4

KDC1DL-E234

* MAIN POWER : AC 3PH (220,380,440,460,480)V 60Hz LIFT 6,9M

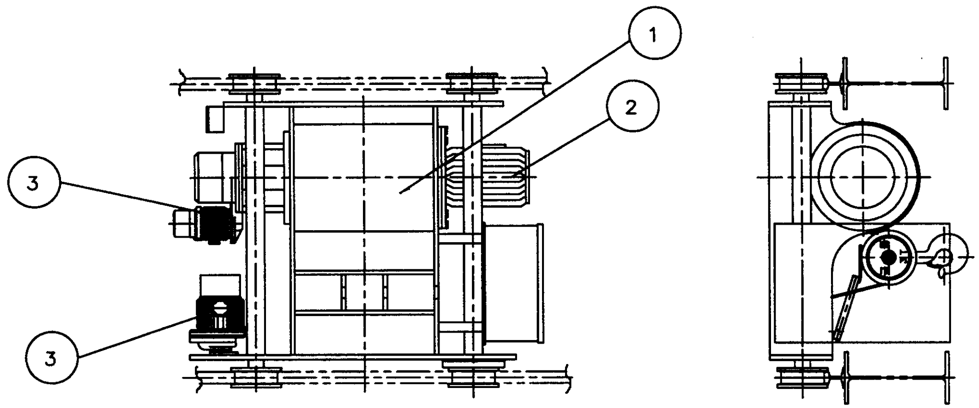

1

KD ELECTRIC WIRE ROPE HOIST			
MODEL		RATING	min
CAPACITY	Kg	LIFT	m
SPEED	m/min	POWER SOURCE	V Hz
HOIST MOTOR	Kw P	AMP.S R&T HOIST	A
TRAV.SPEED	m/min	AMP.S R&T TRAV.	A
TRAV.MOTOR	Kw P	WIRE ROPE	Ø
WIDTH OF RAIL	mm	WEIGET	Kg
DATE		SERIAL	
KUKDONG HOIST CO.,LTD			

2

KD 3 PHASE INDUCTION MOTOR			
KW	P	TYPE	TENV
VOLTS	V	RATING	min
AMP.S	A	AMP.TEMP	40℃
HEARTS		INS.CLASS	F
R.P.M		BEARING	
ROTOR	C	BEARING	
SERIAL.		DATE	
KUKDONG HOIST CO.,LTD			

3

KD 3 PHASE INDUCTION MOTOR			
KW	P	TYPE	TENV
VOLTS	V	RATING	min
AMP.S	A	AMP.TEMP	40℃
HEARTS		INS.CLASS	F
R.P.M		BEARING	
ROTOR	C	BEARING	
SERIAL.		DATE	
KUKDONG HOIST CO.,LTD			

MK	DATE	REVISIONS	CHK.	APP.
⚠				
⚠				
⚠				
⚠				

CUSTOMER		DRAWING	DESIGN	CHECKED	APPROVED	SCALE	DATE	ORDER NO.
DRAWING TITLE	WIRE HOIST NAME PLATE					NONE		
		KD 극동호이스트 주식회사 KUK DONG HOIST CO., LTD.				DWG. NO		

산업재해예방 안전보건공단
KOREA OCCUPATIONAL SAFETY & HEALTH AGENCY
192.168.11.174 / 2014-07-10 09:38:55

불법복제 및 배포금지

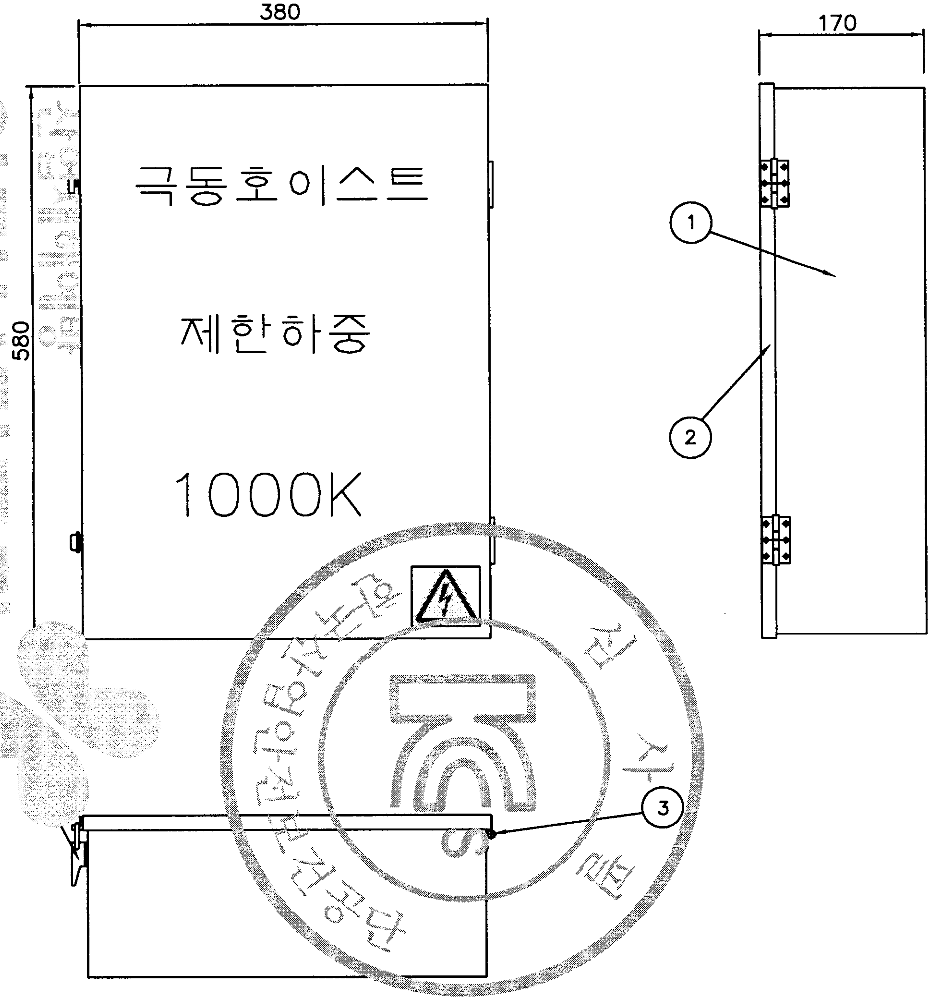

NO	DESCRIPTION	MT'L	REMARKS
1	PANEL CASE	SPC	1.6t
2	PANEL COVER	SPC	1.6t
3	HINGE	PUR'	
4	CLAMP	PUR'	
5	SPONGE	PUR'	

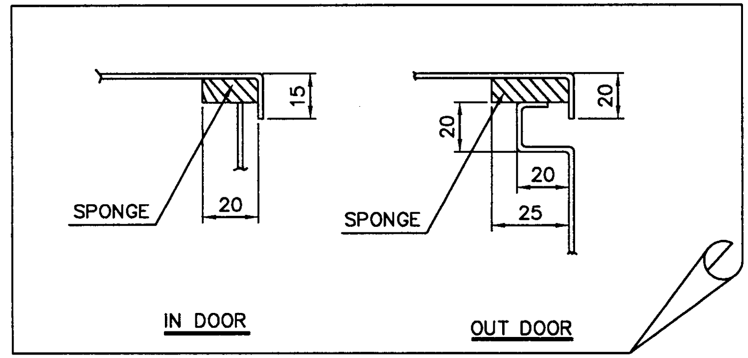

N O T E

1.PROTECTION DEGREE ;

A, INDOOR TYPE : DUST PROOF

B, OUT DOOR TYPE : SPLASH PROOF

2.FINAL PAINTING COLOR (MUNSELL NO.)

A. IN SIDE : 10B 3/5

B. OUT SIDE : 10B 3/5

3.PAINTING THICKNESS : ABOVE 40 Ա

4.APPLICATION VOLTAGE : 220V,380V,440V,460V,480V

5. BOX INSIDE CONTROL CABLE : 2.5sq KIV. HIV

6. 외함 개방 구조는 다음과 같다.

1) 외함 개방시 충전부분이 차단되도록 한다.

2) 외함 개방 후 충전되어있는 부분은 IP2X 이상의 직접 접촉 방호가 되어있을것.

	APP	CHK	DRAWN	SHEEL NO	Q'TY	PROJECT		DWG NO.
극동호이스트 주식회사 KUK DONG HOIST CO., LTD.						DL 1TON	HOIST CONTROL BOX / LAY OUT DRAWING	KDC1EB001

산업재해예방 안전보건공단 KOREA OCCUPATIONAL SAFETY & HEALTH AGENCY
192.168.11.174 / 2014-07-10 09:35:55

불법복제 및 배포금지

1	2	3	4	5	6	7	8	9	10	11	12	13	14	15	16	17	18	19	20

POWER CIRCUIT

TRAVELLING POWER SUPPLY SYSTEM

ADR'S NO. A1

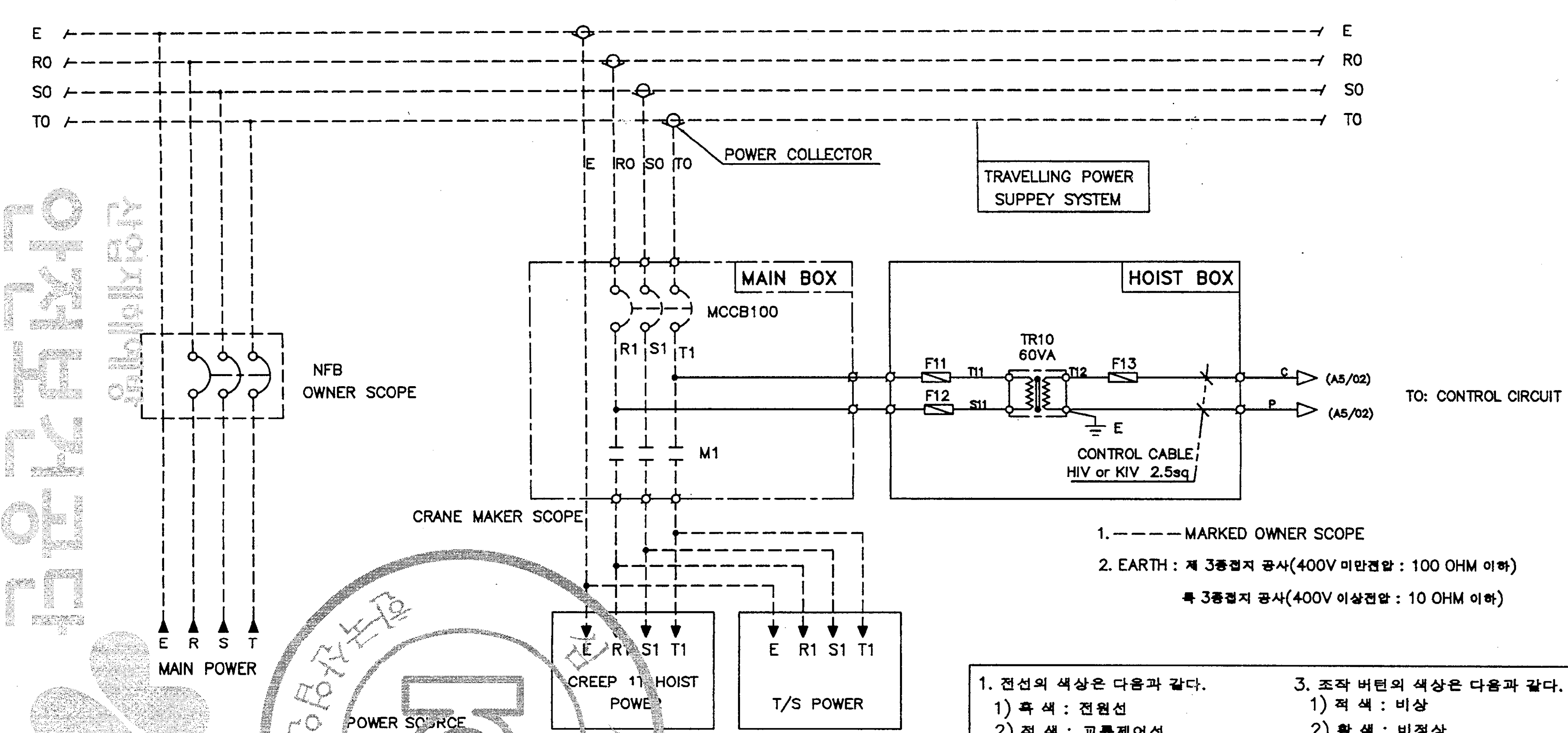

1. ------ MARKED OWNER SCOPE
2. EARTH : 제 3종접지 공사(400V 미만전압 : 100 OHM 이하)
   특 3종접지 공사(400V 이상전압 : 10 OHM 이하)

POWER SOURCE
AC 3ø 60Hz

SELECTION	VOLTAGE	F11 F12	F13	MCCB100
	220V	1A	2A	33AF/20AT
	380V	1A	2A	33AF/10AT
	440V	1A	2A	33AF/10AT
	[illegible]0V	1A	2A	33AF/10AT
	480V	1A	2A	33AF/10AT

1. 전선의 색상은 다음과 같다.
   1) 흑 색 : 전원선
   2) 적 색 : 교류제어선
   3) 청 색 : 직류제어선
   4) 녹색 또는 녹색과 황색 혼용 : 접지
2. 표시등의 색상은 다음과 같다.
   1) 적 색 : 비상
   2) 황 색 : 비정상
   3) 녹 색 : 정상
   4) 청색 : 외무
   5) 흰색 : 중립
3. 조작 버턴의 색상은 다음과 같다.
   1) 적 색 : 비상
   2) 황 색 : 비정상
   3) 청 색 : 외무
   4) 흰색, 회색 또는 흑색 : 지정된 의미없음

MK	DATE	REVISIONS	CHK.	APP.
△				
△				
△				
△				

		DRAWING	DESIGN	CHECKED	APPROVED	SCALE	DATE	ORDER NO.
CUSTOMER						NONE		
DRAWING TITLE	MAIN POWER CIRCUIT 1 DIAGRAM	극동호이스트 주식회사 KUK DONG HOIST CO., LTD.				DWG. NO	KDC01E001	

산업재해예방 안전보건공단
KOREA OCCUPATIONAL SAFETY & HEALTH AGENCY
192.168.11.174 / 2014-07-10 09:38:55

불법복제 및 배포금지

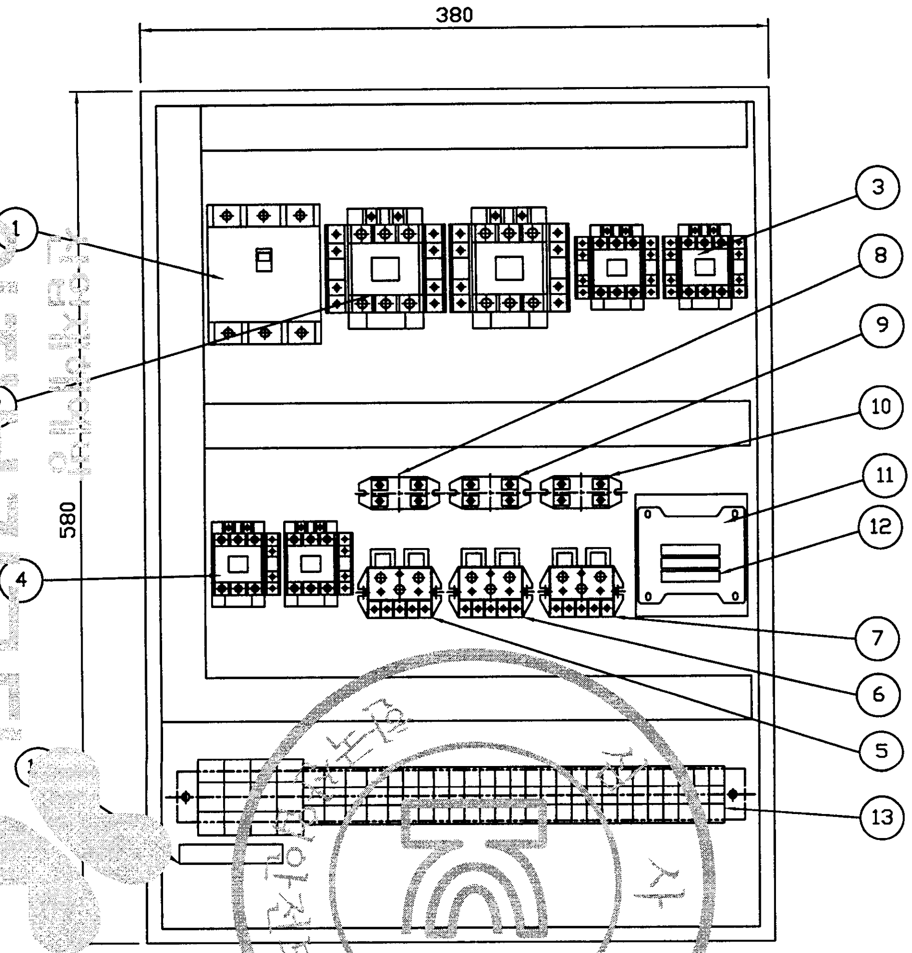

NO	SYMBOL	DESCRIPTIOM	SPECIFICATION	Q'TY	REMARK
1	MCCB100	NO FUSE BREAKER	33AF/20AT	1	HOISTING
2	M101,102	MAG. CONTACTOR	DMC22C	2	HOISTING
3	M111,112	MAG. CONTACTOR	DMC22C	2	CREEP HOIST
4	M301,302	MAG. CONTACTOR	DMC22C	2	TRAVERSING
5	EOCR100	ELECTRONIC OVER CURRENT RELAY	SS-30	1	HOISTING
6	EOCR110	ELECTRONIC OVER CURRENT RELAY	SS-05	1	CREEP HOIST
7	EOCR300	ELECTRONIC OVER CURRENT RELAY	SS-05	1	TRAVERSING
8	RF100	SILICON RECTIFER	SR-30	1	HOISTING
9	RF110	SILICON RECTIFER	SR-30	1	CREEP HOIST
10	RF300	SILICON RECTIFER	SR-30	1	TRAVERSING
11	TR1	TRANSFORMER	220V/110V,120V 60VA	1	
12	F11,12,(13)	FUSE	1A , (2A)	2(1)	
13		TERMINAL BLOCK	35A,15A	1	
14		EARTH TERMINAL	3tx20x50	1	

NOTE

1. 전선의 색상은 다음과 같다.
   1) 흑색 : 교류및 직류전원선
   2) 적색 : 교류제어선
   3) 주황색 : 외부전원에서 공급되는 연동장치 제어회로
   4) 녹색 또는 녹색과 황색 혼용 : 접지선
   5) 청색 : 직류 제어선로
2. CABLE MATERIAL : KIV OR EQUIVALENT, MIN SIZE : 2.5sq
3. 제어용 전선 : 2.5mm KIV,HIV
4. 제작시 다소 변경 될수있음.
5. 외함 개방구조는 다음과 같을것.
   1) 외함 개방시 충전부분이 차단되도록 할것.
   2) 외함 개방후 충전되어있는 부분은 IP2X 이상의 직접 접촉 방호가 되어있을것.

NOTE

1. UPPER LIMIT LS-1,LS-2의 접점 허용 전류 용량 : AC 600V 15A
2. POWER SOURCE : AC 3Φ 220V 60Hz
3. EARTH TERMINAL RESISTANCE 0.018Ω

MK	DATE	REVISIONS	CHK.	APP.
△				
△				
△				
△				

CUSTOMER		DRAWING	DESIGN	CHECKED	APPROVED	SCALE	DATE	ORDER NO.
DRAWING TITLE	HOIST CONTROL BOX / ARRANGEMENT DRAWING					NONE		
		극동호이스트 주식회사 KUK DONG HOIST CO., LTD.				DWG. NO	KDC01BA21	

ADR'S NO.

KDC01BA21

산업재해예방 안전보건공단
KOREA OCCUPATIONAL SAFETY & HEALTH AGENCY
192.168.11.174 / 2014-07-10 09:38:55

1	2	3	4	5	6	7	8	9	10	11	12	13	14	15	16	17	18	19	20

POWER CIRCUIT — ADR'S NO. B1

HOISTING MOTION | CREEP HOIST MOTION

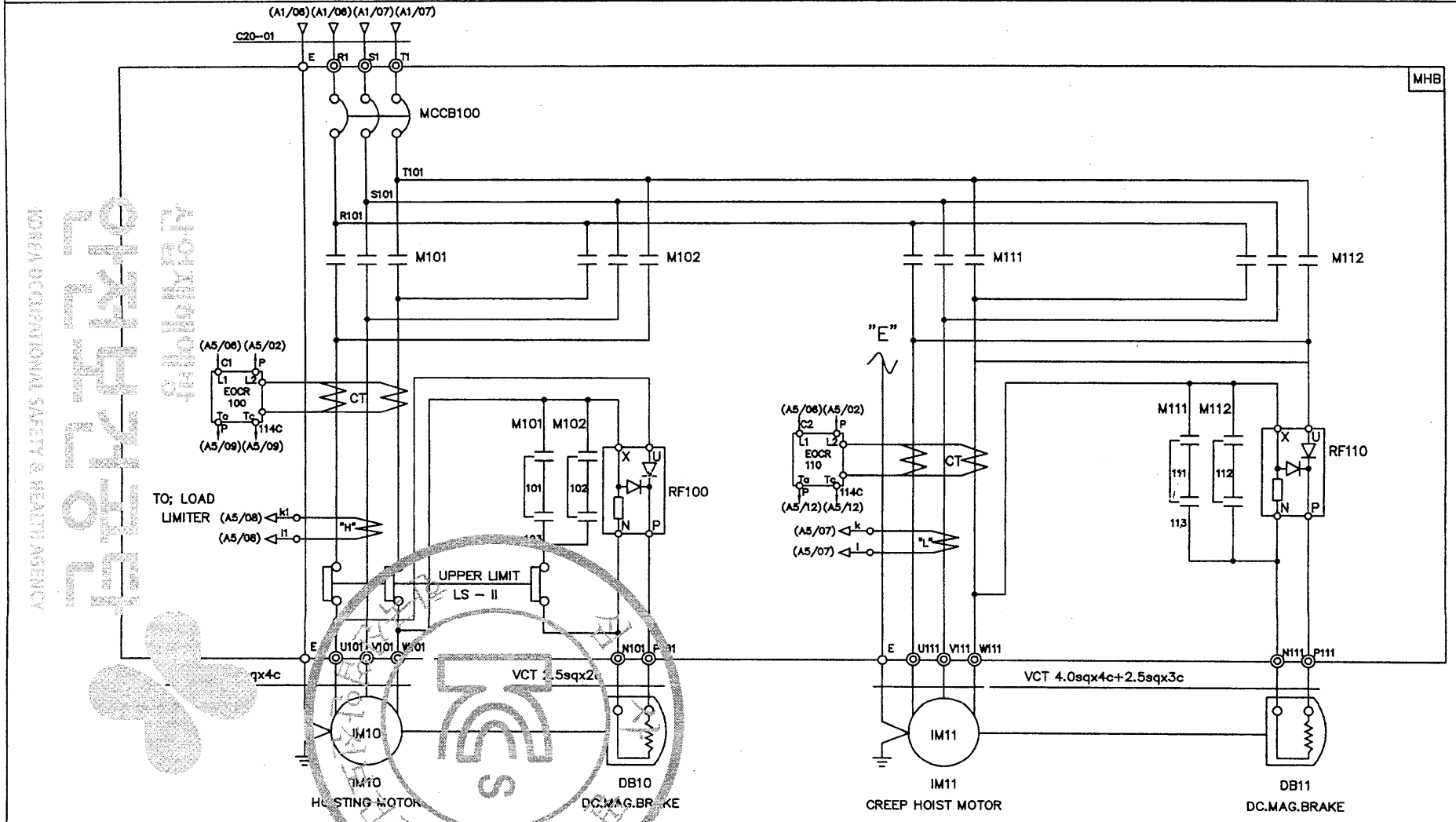

SPECIFICATION / SYMBOLS	HOISTING POWER	HOISTING MOTOR	CREEP MOTOR	DC.MAG BRAKE	NO FUSE BREAKER	TRANSFORMER	FUSE		MAGNET CONTACTOR		UPPER LIMIT	ELECTRIC OVER CURRENT RELAY		SILICON RECTIFIER		LOAD LIMITER	CABLE
DESCRIPTION	HOIST	IM 10	IM 11	DB10, 11	MCCB100	TR 1	F11,F12	F13	M101,M102	M111,M112	LS-I, LS-II	EOCR100	EOCR110	RF100	RF110	LOAD LIMITER	C20-01
	1TON AC3PH 220V 60Hz	2.4KWx4P	0.4KWx4P	DC 100V	DBE-33AF/20A	220/110V,120V/60VA	1A	2A	DOC-22P	DOC-22P	AC 600V 75A	SS-30	SS-05	SR-30	SR-30	JDL-100	VFCT 4.0sqx4c
SELECTION / MAKER	KUKDONG				DEARYUK	SHINHAN	-		DEARYUK		KUK DONG	ASAN				JUNGHO	DONGIL

MK	DATE	REVISIONS	CHK.	APP.
4				
3				
2				
1				

CUSTOMER		DRAWING	DESIGN	CHECKED	APPROVED	SCALE	DATE	ORDER NO.
DRAWING TITLE	CREEP HOISTING POWER & CONTROL					NONE		
	CIRCUIT DIAGRAM	극동호이스트 주식회사 KUK DONG HOIST CO., LTD.				DWG. NO	KDC01E22	

192.168.11.174 / 2014-07-10 09:30:55

불법복제 및 배포금지

1	2	3	4	5	6	7	8	9	10	11	12	13	14	15	16	17	18	19	20

POWER CIRCUIT — ADR'S NO.

TRAVERSING MOTION — C1

KDC01E23-DL

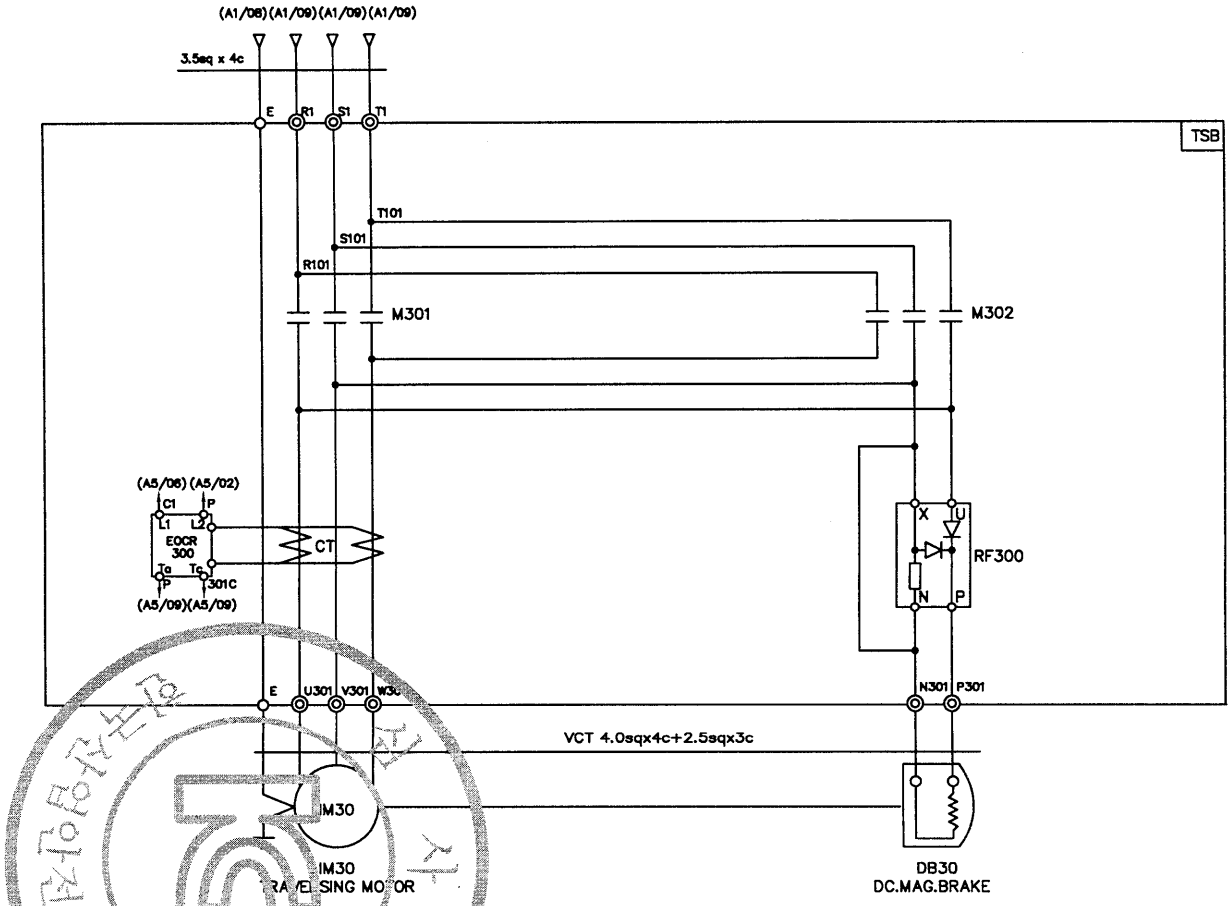

SPECIFICATION / SYMBOLS	TRAVERSING MOTOR	DC MAG' BRAKE	MAGNET CONTACTOR	SILICON RECTIFIER	ELECTRIC OVER CURRENT RELAY	LIMIT SWTCH
DESCRIPTION	IM 30	DB 30	M301 , M302	RF 300	EOCR 300	LS-301 , LS-302
	0.75KW x 4P AC 3PH 220V 60Hz	DC 100V	DMC22C	SR-30 AC 220V/DC 100V	SS-05	HY - M904
	0.5KW x 6P AC 3PH 220V 60Hz	DC 100V	DMC22C	SR-30 AC 220V/DC 100V	SS-05	HY - M904
SELECTION / MAKER	KUKDONG		DONG-A	ASECO		

MK	DATE	REVISIONS	CHK.	APP.
4				
3				
2				
1				

CUSTOMER		DRAWING	DESIGN	CHECKED	APPROVED	SCALE	DATE	ORDER NO.
DRAWING TITLE	TRAVERSING POWER CONTROL CIRCUIT					NONE		
	DIAGRAM	극동호이스트 주식회사 KUK DONG HOIST CO., LTD.				DWG. NO	KDC01E23-DL	

192.168.11.174 / 2014-07-10 09:38:55
KOREA OCCUPATIONAL SAFETY & HEALTH AGENCY
산업재해예방 안전보건공단

불법복제 및 배포금지

ADR'S NO.

KDC01BA31

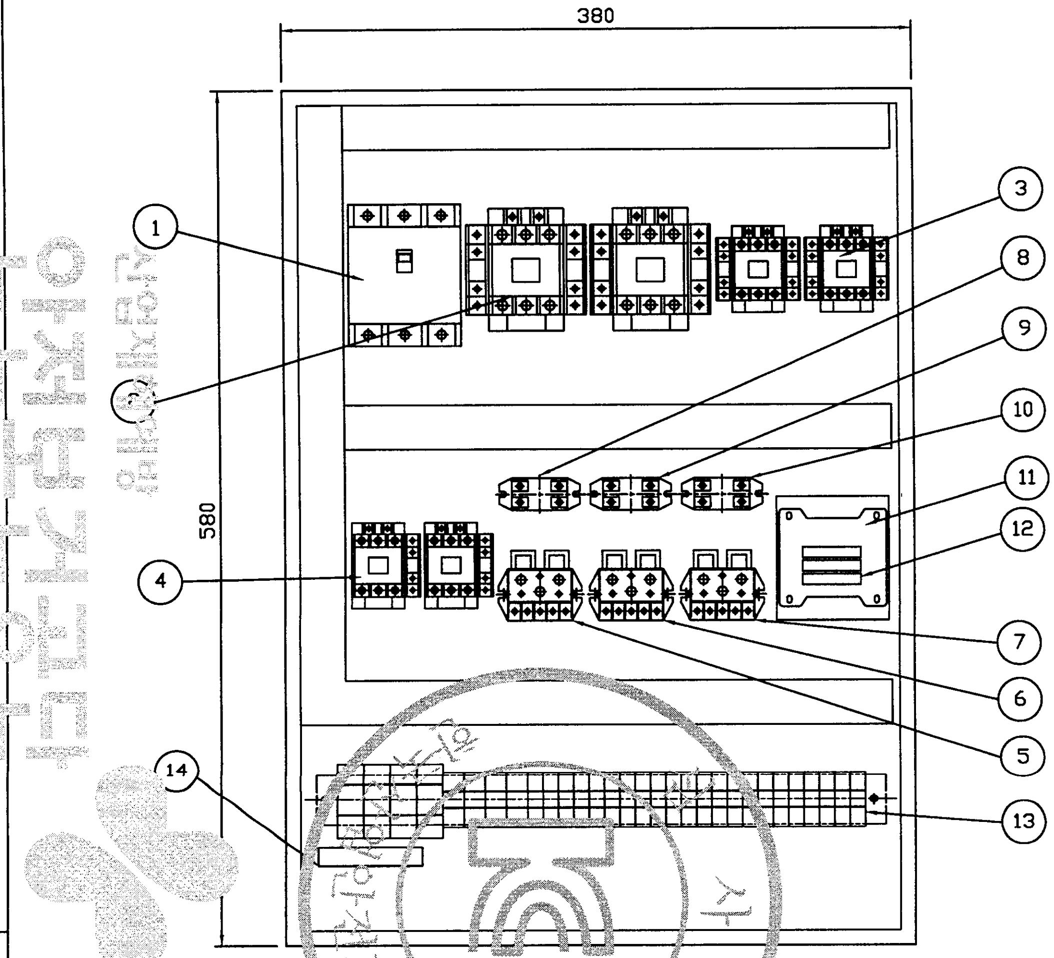

NO	SYMBOL	DESCRIPTIOM	SPECIFICATION	Q'TY	REMARK
1	MCCB100	NO FUSE BREAKER	33AF/10AT	1	HOISTING
2	M101,102	MAG. CONTACTOR	DMC22C	2	HOISTING
3	M111,112	MAG. CONTACTOR	DMC22C	2	CREEP HOIST
4	M301,302	MAG. CONTACTOR	DMC22C	2	TRAVERSING
5	EOCR100	ELECTRONIC OVER CURRENT RELAY	SS-30	1	HOISTING
6	EOCR110	ELECTRONIC OVER CURRENT RELAY	SS-05	1	CREEP HOIST
7	EOCR300	ELECTRONIC OVER CURRENT RELAY	SS-05	1	TRAVERSING
8	RF100	SILICON RECTIFER	SR-30	1	HOISTING
9	RF110	SILICON RECTIFER	SR-30	1	CREEP HOIST
10	RF300	SILICON RECTIFER	SR-30	1	TRAVERSING
11	TR1	TRANSFORMER	380V/110V,120V 60VA	1	
12	F11,12,(13)	FUSE	1A , (2A)	2(1)	
13		TERMINAL BLOCK	35A,15A	1	
14		EARTH TERMINAL	3tx20x50	1	

NOTE

1. 전선의 색상은 다음과 같다.
   1) 흑색 : 고류및 직류전원선
   2) 적색 : 고류제어선
   3) 주황색 : 외부 전원에서 공급되는 연동장치 제어회로
   4) 녹색 또는 녹색과 황색 혼용 : 접지선
   5) 청색 : 직류 제어선
2. CABLE MATERIAL : KIV OR EQUIVALENT, MIN SIZE : 2.5sq
3. 제어용 전선 : 2.5mm KIV,HIV
4. 제작시 다소 변경 될수있음.
5. 외함 개방구조는 다음과 같을것.
   1) 외함 개방시 충전부분이 차단되도록 할것.
   2) 외함 개방후 충전되어있는 부분은 IP2X 이상의 직접 접촉 방호가 되어있을것.

NOTE

1. UPPER LIMIT LS-1,LS-2의 접점 허용 전류 용량 : AC 600V, 75A
2. POWER SOURCE : AC 3Ø 380V 60Hz
3. EARTH TERMINAL RESISTANCE 0.01Ω

MK	DATE	REVISIONS	CHK.	APP.
⚠				
⚠				
⚠				
⚠				

CUSTOMER	
DRAWING TITLE	HOIST CONTROL BOX ARRANGEMENT DRAWING

DRAWING	DESIGN	CHECKED	APPROVED	SCALE	DATE	ORDER NO.
				NONE		
극동호이스트 주식회사 KUK DONG HOIST CO., LTD.				DWG. NO	KDC01BA31	

산업재해예방 안전보건공단
KOREA OCCUPATIONAL SAFETY & HEALTH AGENCY
192.168.11.174 / 2014-07-10 09:38:55

1	2	3	4	5	6	7	8	9	10	11	12	13	14	15	16	17	18	19	20

POWER CIRCUIT

ADR'S NO. B1

HOISTING MOTION | CREEP HOIST MOTION

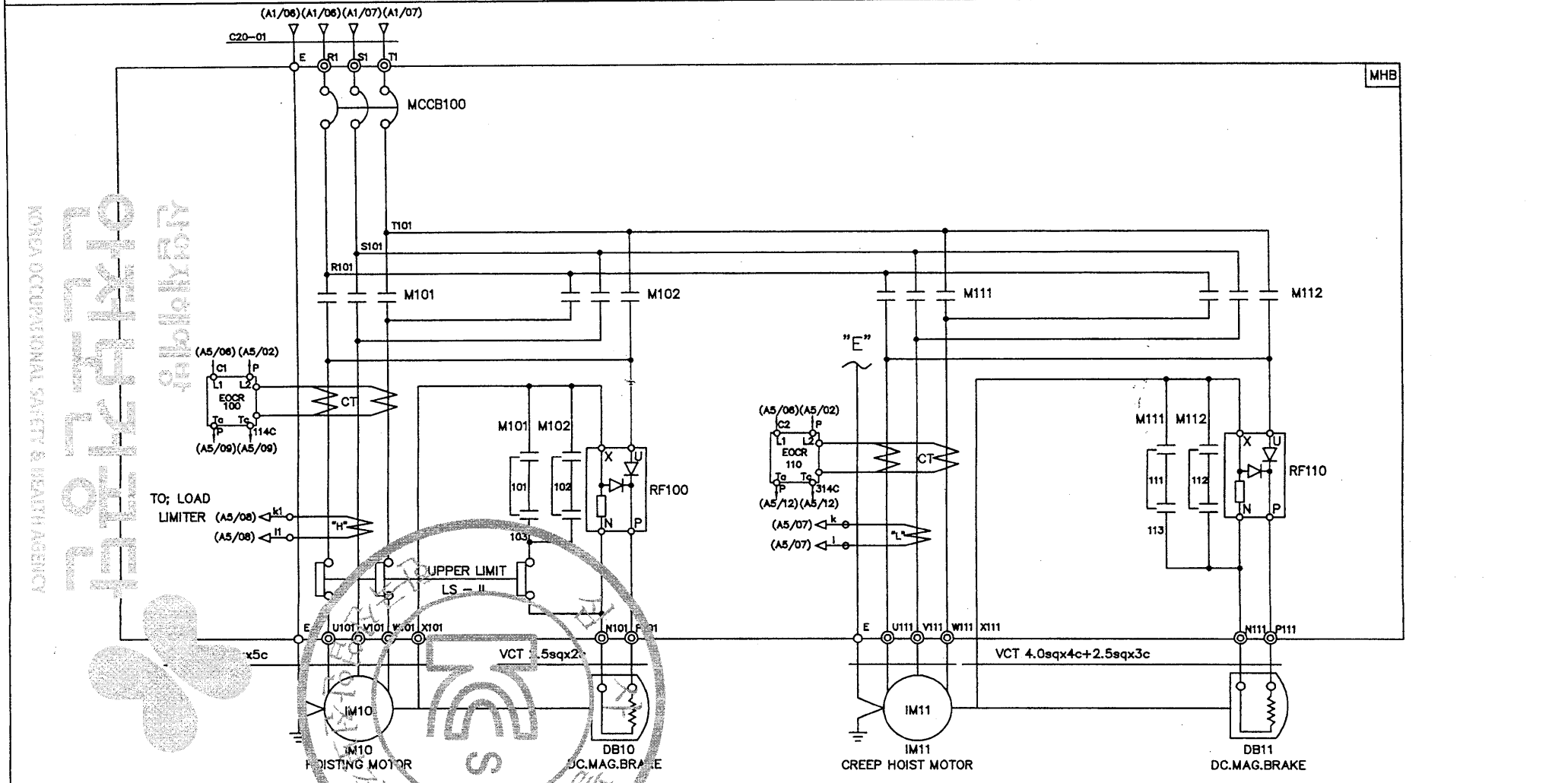

SPECIFICATION / SYMBOLS	HOISTING POWER	HOISTING MOTOR	CREEP MOTOR	DC.MAG BRAKE	NO FUSE BREAKER	TRANSFORMER	FUSE		MAGNET CONTACTOR		UPPER LIMIT	ELECTRIC OVER CURRENT RELAY		SILICON RECTIFIER		LOAD LIMITER	CABLE
DESCRIPTION	HOIST	IM 10	IM 11	DB10, [illegible]	MCCB100	TR 1	F11,F12	F13	M101,M102	M111,M112	LS-I, LS-II	EOCR100	EOCR110	RF100	RF110	LOAD LIMITER	C20-01
	1TON AC 3PH 380V 60Hz	2.4[illegible]4P	0.4KWx4P	[illegible] 100V	DBE-33AF/10A	380V/110V,120V, 60VA	1A	2A	DOC-22P	DOC-22P	AC 600V 75A	SS-30	SS-05	SR-30	SR-30	JDL-100	VFCT 4.0sqx4c
SELECTION / MAKER	KUKDONG				DEARYUK	SHINHAN	–		DEARYUK		KUKDONG	ASAN				JUNGHO	DONGIL

MK	DATE	REVISIONS	CHK.	APP.
4				
3				
2				
1				

CUSTOMER		DRAWING	DESIGN	CHECKED	APPROVED	SCALE	DATE	ORDER NO.
DRAWING TITLE	CREEP HOISTING POWER CONTROL CIRCUIT DIAGRAM					NONE		
						DWG. NO	KDC01E32	

192.168.11.174 / 2014-07-10 09:08:55

불법복제 및 배포금지

1	2	3	4	5	6	7	8	9	10	11	12	13	14	15	16	17	18	19	20

POWER CIRCUIT — ADR'S NO.

TRAVERSING MOTION — C1

KDC01E33-DL

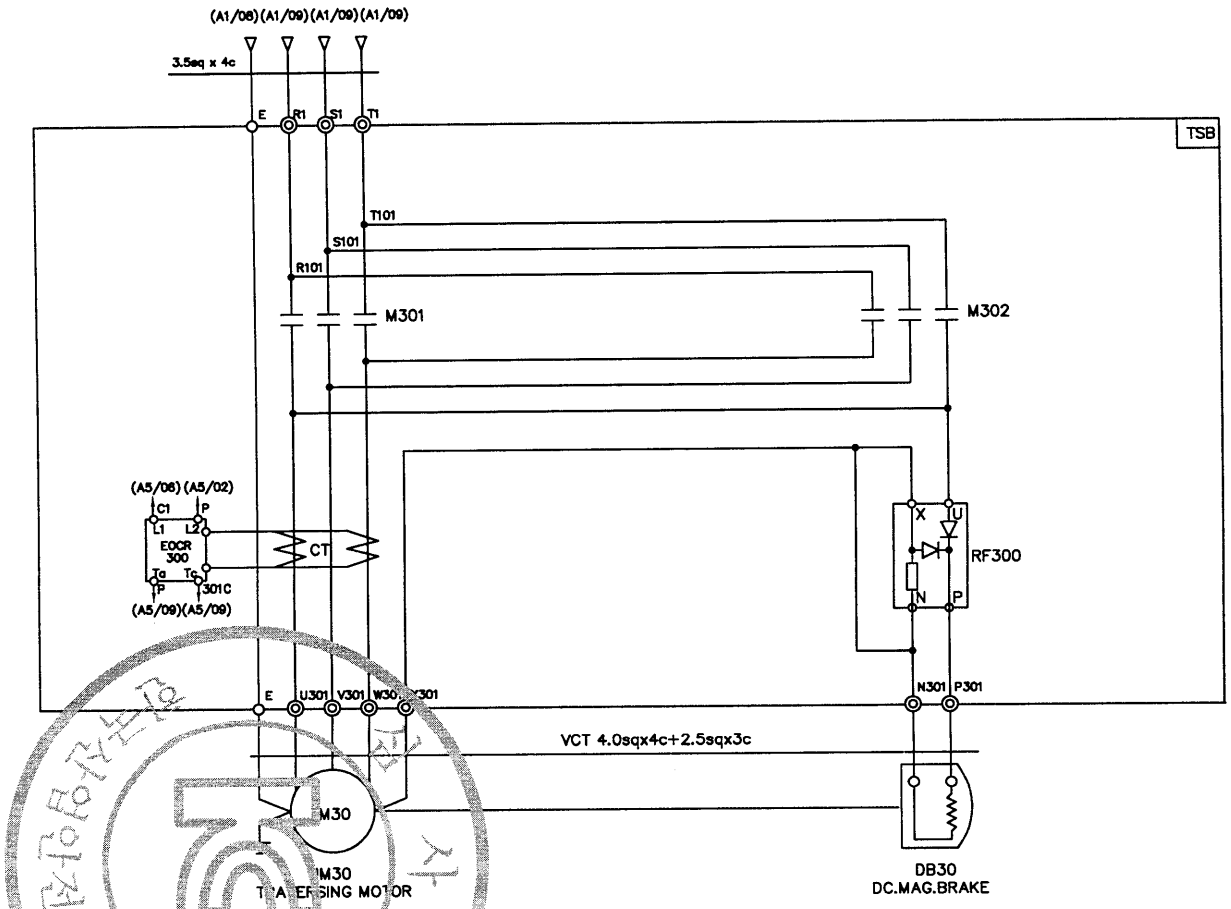

SPECIFICATION / SYMBOLS / DESCRIPTION	TRAVERSING MOTOR	DC MAG' BRAKE	MAGNET CONTACTOR	SILICON RECTIFIER	ELECTRIC OVER CURRENT RELAY	LIMIT SWTCH
	IM 30	DB 30	M301 , M302	RF 300	EOCR 300	LS-301 , LS-302
	0.75KW x 4P AC 3PH 380V 60Hz	DC 100V	DMC22C	SR-30 AC 220V/DC 100V	SS-05	HY - M904
	0.5KW x 6P AC 3PH 380V 60Hz	DC 100V	DMC22C	SR-30 AC 220V/DC 100V	SS-05	HY - M904
SELECTION MAKER	KUKDONG		DONG-A	ASECO		

MK	DATE	REVISIONS	CHK.	APP.
4				
3				
2				
1				

CUSTOMER		DRAWING	DESIGN	CHECKED	APPROVED	SCALE	DATE	ORDER NO.
DRAWING TITLE	TRAVERSING POWER CONTROL CIRCUIT DIAGRAM					NONE		
		국동호이스트 주식회사 KUK DONG HOIST CO., LTD.				DWG. NO	KDC01E33-DL	

192.168.11.174 / 2014-07-10 09:38:56

불법복제 및 배포금지

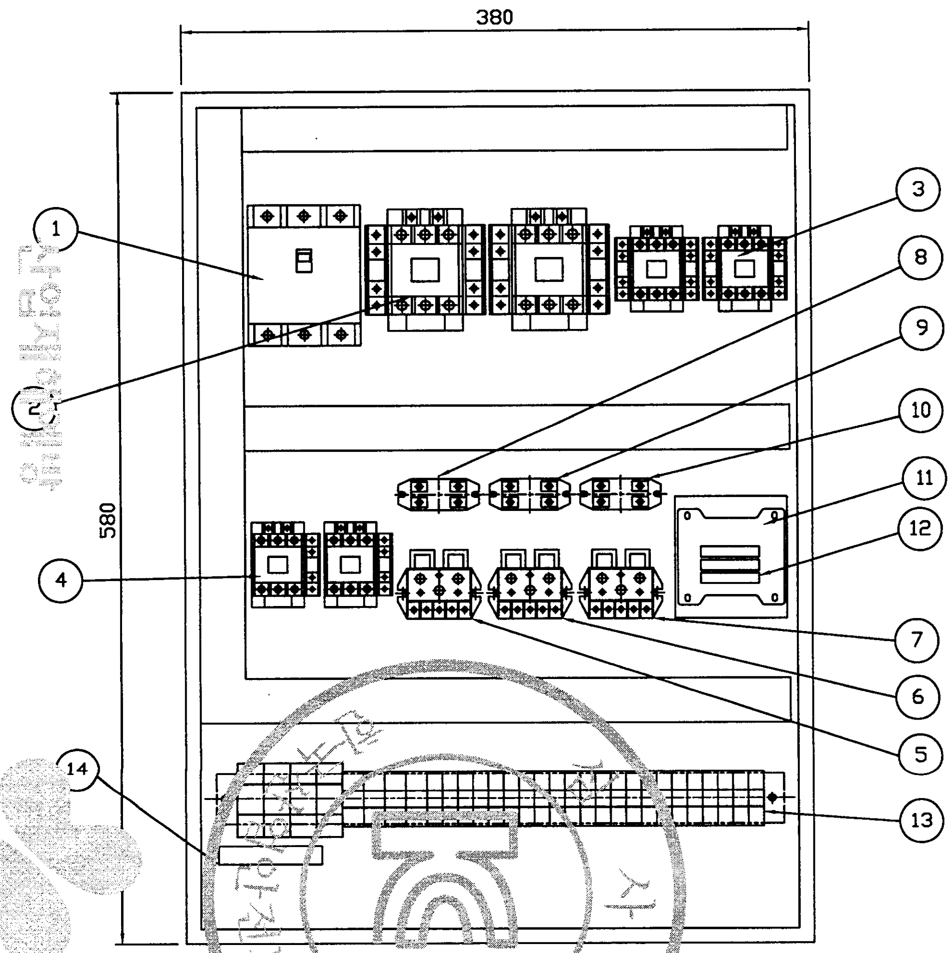

NOTE

1. UPPER LIMIT LS-1,LS-2의 접점 허용 전류 용량 : AC 600V, 75A
2. POWER SOURCE : AC 3ø 440V 60Hz
3. EARTH TERMINAL RESISTANCE 0.018Ω

NO	SYMBOL	DESCRIPTIOM	SPECIFICATION	Q'TY	REMARK
1	MCCB100	NO FUSE BREAKER	33AF/10AT	1	HOISTING
2	M101,102	MAG. CONTACTOR	DMC22C	2	HOISTING
3	M111,112	MAG. CONTACTOR	DMC22C	2	CREEP HOIST
4	M301,302	MAG. CONTACTOR	DMC22C	2	TRAVERSING
5	EOCR100	ELECTRONIC OVER CURRENT RELAY	SS-30	1	HOISTING
6	EOCR110	ELECTRONIC OVER CURRENT RELAY	SS-05	1	CREEP HOIST
7	EOCR300	ELECTRONIC OVER CURRENT RELAY	SS-05	1	TRAVERSING
8	RF100	SILICON RECTIFER	SR-30	1	HOISTING
9	RF110	SILICON RECTIFER	SR-30	1	CREEP HOIST
10	RF300	SILICON RECTIFER	SR-30	1	TRAVERSING
11	TR1	TRANSFORMER	440V/110V,120V 60VA	1	
12	F11,12,(13)	FUSE	1A , (2A)	2(1)	
13		TERMINAL BLOCK	35A,15A	1	
14		EARTH TERMINAL	3tx20x50	1	

NOTE

1. 전선의 색상은 다음과 같다.
   1) 흑색 : 전원선
   2) 적색 : 교류제어선
   3) 주황색 : 외부 전원에서 공급되는 연동장치 제어회로
   4) 녹색 또는 녹색과 황색 혼용 : 접지선
   5) 청색 : 직류 제어선로
2. CABLE MATERIAL : KIV OR EQUIVALENT / MIN SIZE : 2.5sq
3. 제어용 전선 : 2.5mm KIV,HIV
4. 제작시 다소 변경 될수있음.
5. 외함 개방구조는 다음과 같을것.
   1) 외함 개방시 충전부분이 차단되도록 할것.
   2) 외함 개방후 충전되어있는 부분은 IP2X 이상의 직접 접촉 방호가 되어있을것.

MK	DATE	REVISIONS	CHK.	APP.	CUSTOMER		DRAWING	DESIGN	CHECKED	APPROVED	SCALE	DATE	ORDER NO.
					DRAWING TITLE	HOIST CONTROL BOX / ARRANGEMENT DRAWING	극동호이스트 주식회사 KUK DONG HOIST CO., LTD.				NONE		
											DWG. NO	KDC01BA41	

ADR'S NO.

KDC01BA41

산업재해예방 안전보건공단 KOREA OCCUPATIONAL SAFETY & HEALTH AGENCY

192.168.11.174 / 2014-07-10 09:38:55

불법복제 및 배포금지

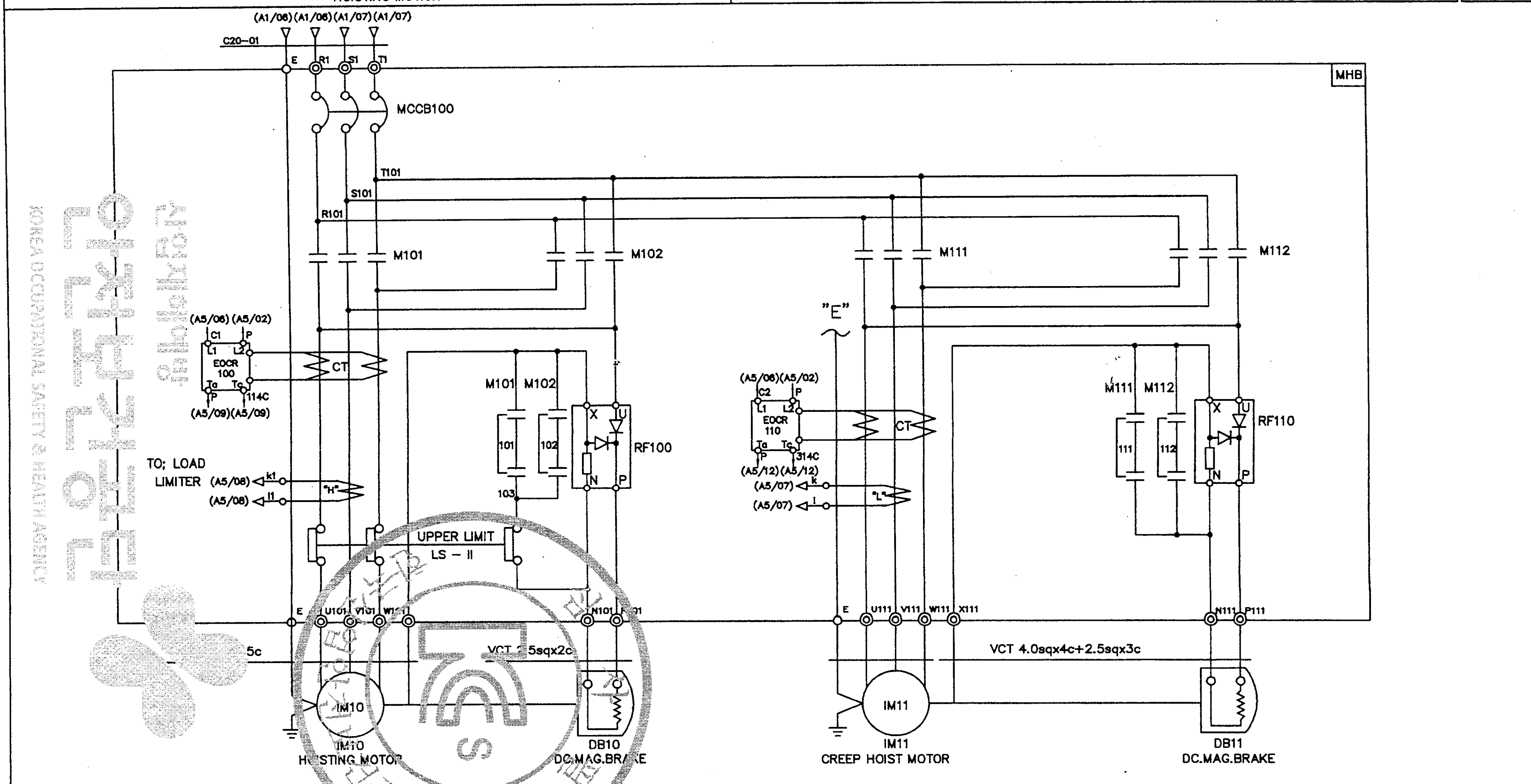

SPECIFICATION	HOISTING POWER	HOISTING MOTOR	CREEP MOTOR	DC.MAG' BRAKE	NO FUSE BREAKER	TRANSFORMER	FUSE		MAGNET CONTACTOR		UPPER LIMIT	ELECTRIC OVER CURRENT RELAY		SILICON RECTIFIER		LOAD LIMITER	CABLE
SYMBOLS / DESCRIPTION	HOIST	IM 10	IM 11	DB10, 11	MCCB100	TR 1	F11,F12	F13	M101,M102	M111,M112	LS-I, LS-II	EOCR100	EOCR110	RF100	RF110	LOAD LIMITER	C20-01
	1TON AC 3PH 440V 60Hz	2.4KW×4P	0.4KW×4P	DC 100V	DBE-33AF/10A	440/110V,120V,60VA	1A	2A	DOC-22P	DOC-22P	AC 600V 75A	SS-30	SS-05	SR-30	SR-30	JDL-100	VFCT 4.0sqx4c
SELECTION / MAKER	KUKDONG				DEARYUK	SHINHAN	-		DEARYUK		KUKDONG	ASAN				JUNGHO	DONGIL

MK	DATE	REVISIONS	CHK.	APP.
4				
3				
2				
1				

CUSTOMER		DRAWING	DESIGN	CHECKED	APPROVED	SCALE	DATE	ORDER NO.
DRAWING TITLE	CREEP HOISTING POWER CONTROL CIRCUIT DIAGRAM					NONE		
		극동호이스트 주식회사 KUK DONG HOIST CO., LTD.				DWG. NO	KDC01E42	

산업재해예방 안전보건공단 KOREA OCCUPATIONAL SAFETY & HEALTH AGENCY

192.168.11.174 / 2014-07-10 09:38:55

불법복제 및 배포금지

POWER CIRCUIT

TRAVERSING MOTION

ADR'S NO. C1

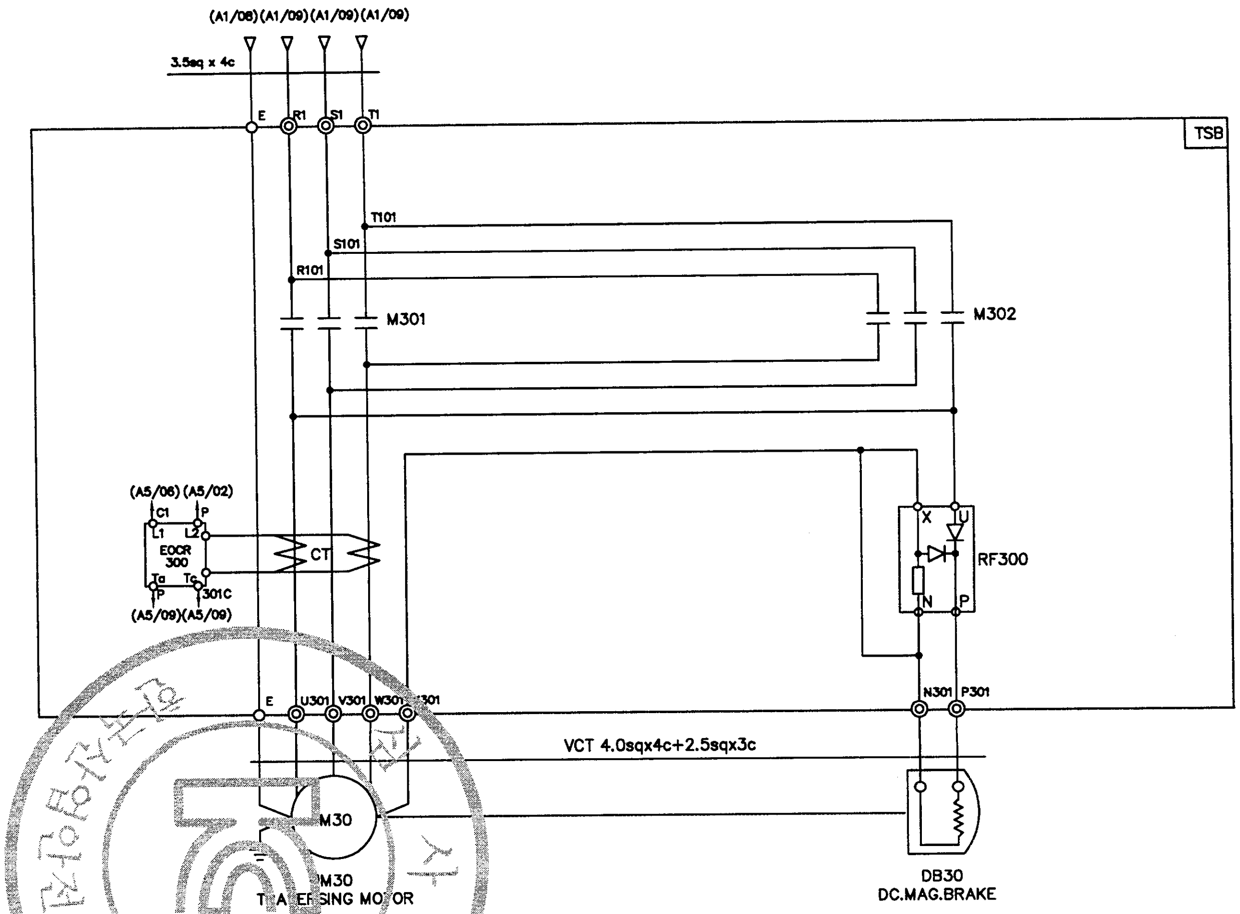

SPECIFICATION / SYMBOLS / DESCRIPTION	TRAVERSING MOTOR	DC MAG' BRAKE	MAGNET CONTACTOR	SILICON RECTIFIER	ELECTRIC OVER CURRENT RELAY	LIMIT SWTCH
	IM 30	DB 30	M301 , M302	RF 300	EOCR 300	LS-301 , LS-302
	0.75KW x 4P AC 3PH 440V 60Hz	DC 100V	DMC22C	SR-30 AC 220V/DC 100V	SS-05	HY – M904
	0.5KW x 6P AC 3PH 440V 60Hz	DC 100V	DMC22C	SR-30 AC 220V/DC 100V	SS-05	HY – M904
SELECTION / MAKER	KUKDONG		DONG-A	ASECO		

MK	DATE	REVISIONS	CHK.	APP.
△				
△				
△				
△				

CUSTOMER		DRAWING	DESIGN	CHECKED	APPROVED	SCALE	DATE / ORDER NO.
						NONE	
DRAWING TITLE	TRAVERSING POWER CONTROL CIRCUIT DIAGRAM	극동호이스트 주식회사 KUK DONG HOIST CO., LTD.				DWG. NO	KDC01E43-DL

KDC01E43-DL

검사 한국산업안전보건공단
산업재해예방 안전보건공단 KOREA OCCUPATIONAL SAFETY & HEALTH AGENCY
192.168.11.174 / 2014-07-10 09:38:55

1	2	3	4	5	6	7	8	9	10	11	12	13	14	15	16	17	18	19	20.

ADR'S NO.

KDC01BA51

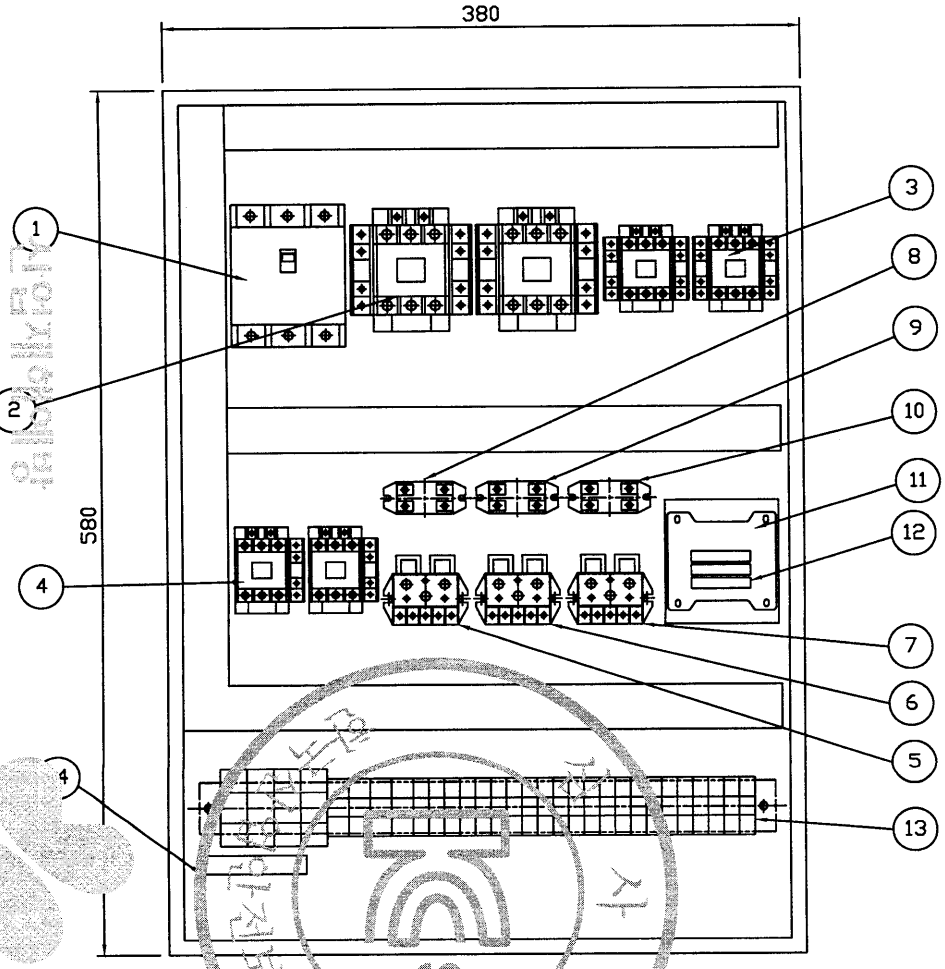

NO	SYMBOL	DESCRIPTIOM	SPECIFICATION	Q'TY	REMARK
1	MCCB100	NO FUSE BREAKER	33AF/10AT	1	HOISTING
2	M101,102	MAG. CONTACTOR	DMC22C	2	HOISTING
3	M111,112	MAG. CONTACTOR	DMC22C	2	CREEP HOIST
4	M301,302	MAG. CONTACTOR	DMC22C	2	TRAVERSING
5	EOCR100	ELECTRONIC OVER CURRENT RELAY	SS-30	1	HOISTING
6	EOCR110	ELECTRONIC OVER CURRENT RELAY	SS-05	1	CREEP HOIST
7	EOCR300	ELECTRONIC OVER CURRENT RELAY	SS-05	1	TRAVERSING
8	RF100	SILICON RECTIFER	SR-30	1	HOISTING
9	RF110	SILICON RECTIFER	SR-30	1	CREEP HOIST
10	RF300	SILICON RECTIFER	SR-30	1	TRAVERSING
11	TR1	TRANSFORMER	460V/110V,120V 60VA	1	
12	F11,12,(13)	FUSE	1A , (2A)	2(1)	
13		TERMINAL BLOCK	35A,15A	1	
14		EARTH TERMINAL	3tx20x50	1	

NOTE

1. UPPER LIMIT LS-1,LS-2의 전적 허용 접점 용량. : AC 600V, 75A
2. POWER SOURCE : AC 380 460V 60Hz
3. EARTH TERMINAL RESISTANCE 0.018Ω

NOTE

1. 전선의 색상은 다음과 같다.
   1) 흑색 : 전원선
   2) 적색 : 고류제어선
   3) 주황색 : 외부 전원에서 공급되는 연동장치 제어회로
   4) 녹색 또는 녹색과 황색 혼용 : 접지선
   5) 청색 : 직류 제어선로
2. CABLE MATERIAL : KIV OR EQUIVALENT / MIN SIZE : 2.5sq
3. 제어용 전선 : 2.5mm KIV,HIV
4. 제작시 다소 변경 될수있음.
5. 외함 개방구조는 다음과 같을것.
   1) 외함 개방시 충전부분이 차단되도록 할것.
   2) 외함 개방후 충전되어있는 부분은 IP2X 이상의 직접 접촉 방호가 되어있을것.

MK	DATE	REVISIONS	CHK.	APP.
4				
3				
2				
1				

CUSTOMER		DRAWING	DESIGN	CHECKED	APPROVED	SCALE	DATE	ORDER NO.
DRAWING TITLE	HOIST CONTROL BOX					NONE		
	ARRANGEMENT DRAWING	극동호이스트 주식회사 KUK DONG HOIST CO., LTD.				DWG. NO	KDC01BA51	

192.168.11.174 / 2014-07-10 09:38:55
KOSHA OCCUPATIONAL SAFETY & HEALTH AGENCY
본 복제 및 배포금지

1	2	3	4	5	6	7	8	9	10	11	12	13	14	15	16	17	18	19	20
POWER CIRCUIT																			ADR'S NO.
HOISTING MOTION										CREEP HOIST MOTION									B1

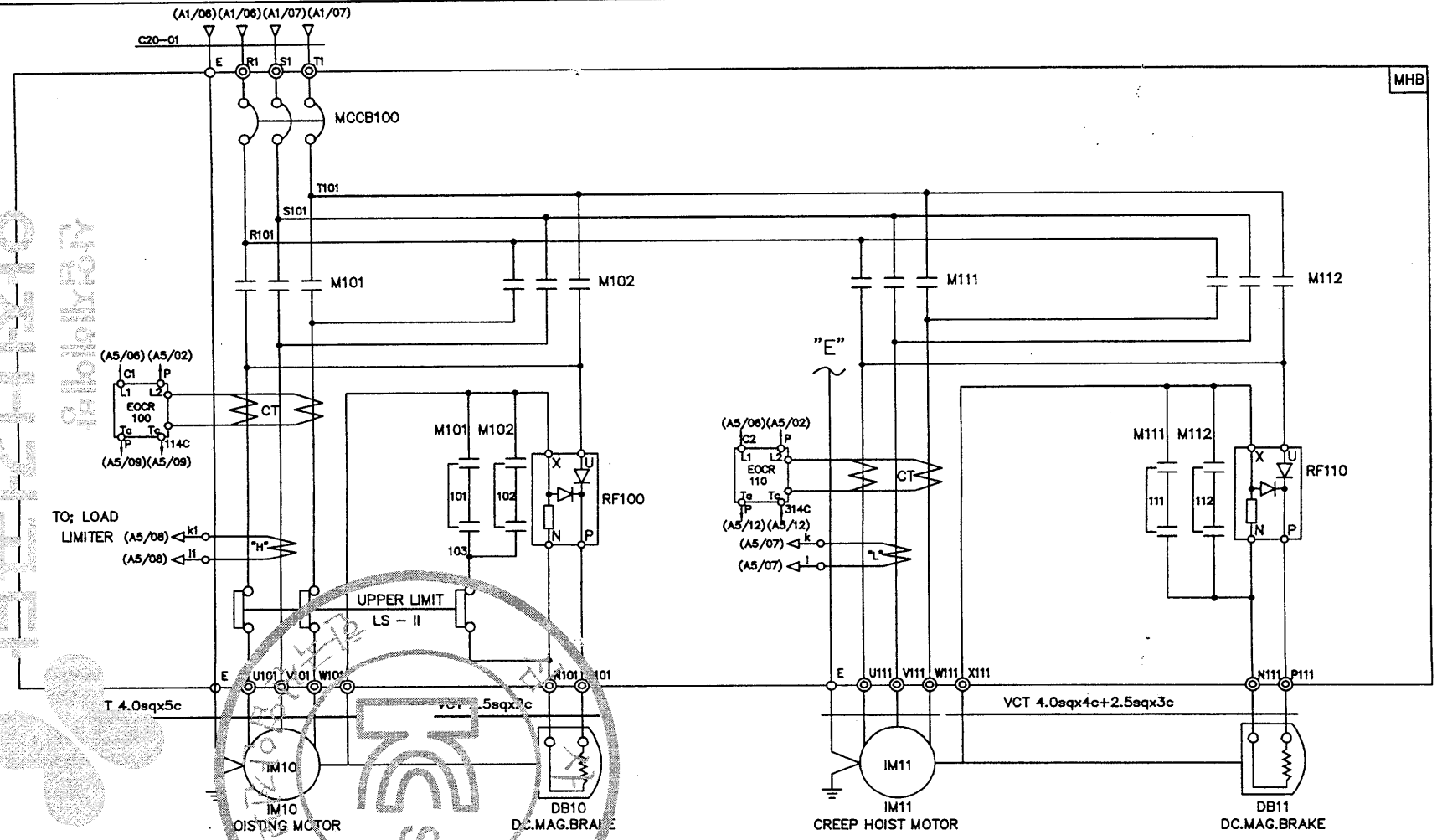

SPECIFICATION / SYMBOLS	HOISTING POWER	HOISTING MOTOR	CREEP MOTOR	DC.MAG BRAKE	NO FUSE BREAKER	TRANSFORMER	FUSE		MAGNET CONTACTOR		UPPER LIMIT	ELECTRIC OVER CURRENT RELAY		SILICON RECTIFIER		LOAD LIMITER	CABLE
DESCRIPTION	HOIST	IM 10	IM 11	DB10, 11	MCCB100	TR 1	F11,F12	F13	M101,M102	M111,M112	LS-I, LS-II	EOCR100	EOCR110	RF100	RF110	LOAD LIMITER	C20-01
	1TON AC 3PH 460V 60Hz	2.4Kw 4P	0.4Kw 4P	DC 100V	DBE-33AF/10A	460/110V,120V,60VA	1A	2A	DOC-22P	DOC-22P	AC 600V 75A	SS-30	SS-05	SR-30	SR-30	JDL-100	VFCT 4sqx4c
SELECTION / MAKER	KUKDONG				DAERYUK	SHINHAN	-		DAERYUK		KUKDONG	ASAN				JUNGHO	DONGIL

MK	DATE	REVISIONS	CHK.	APP.
4				
3				
2				
1				

CUSTOMER		DRAWING	DESIGN	CHECKED	APPROVED	SCALE	DATE	ORDER NO.
DRAWING TITLE	CREEP HOISTING POWER CONTROL CIRCUIT DIAGRAM					NONE		
						DWG. NO	KDC01E56	

192.168.11.174 / 2014-07-10 09:08:56

1	2	3	4	5	6	7	8	9	10	11	12	13	14	15	16	17	18	19	20

POWER CIRCUIT — ADR'S NO.

TRAVERSING MOTION — C1

KDC01E53-DL

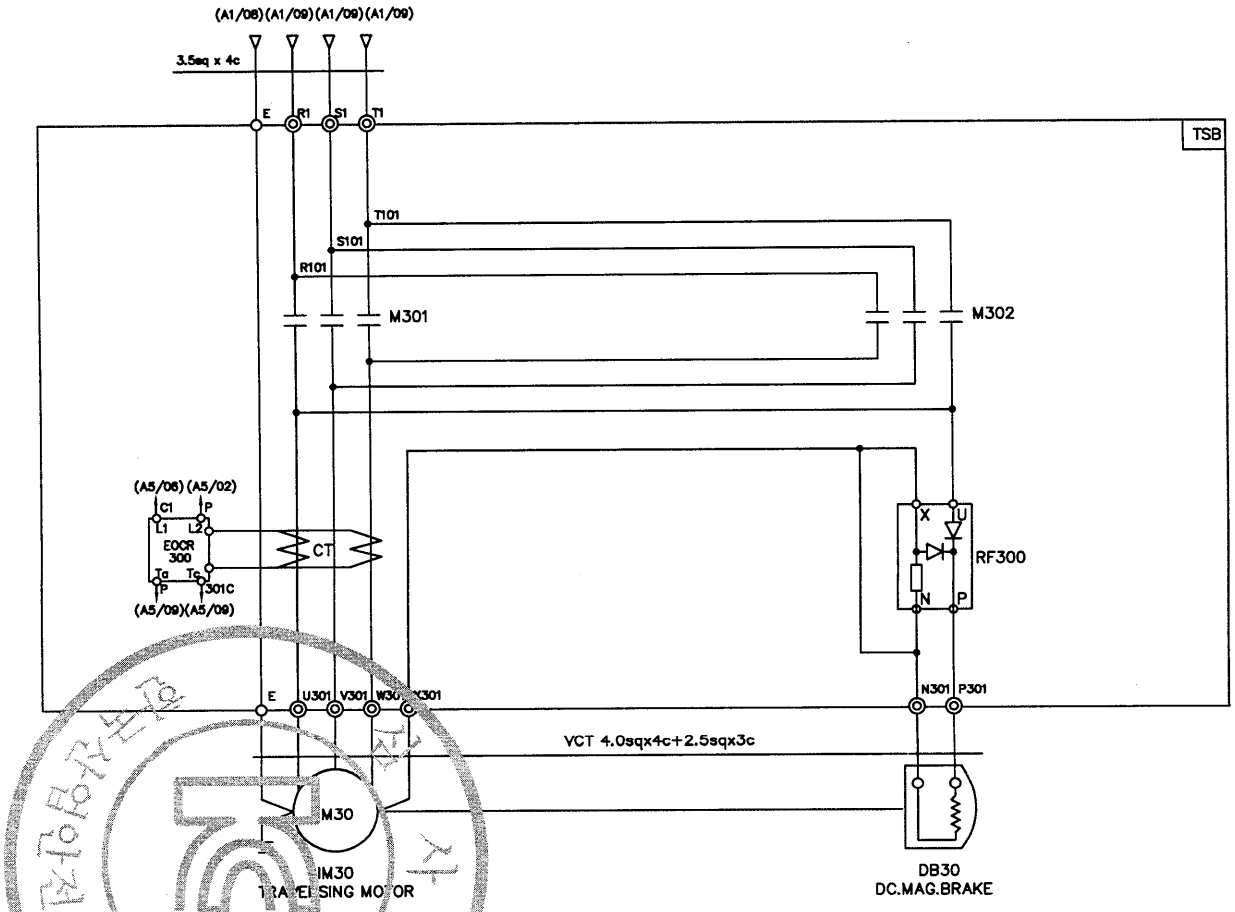

SPECIFICATION / SYMBOLS	TRAVERSING MOTOR	DC MAG' BRAKE	MAGNET CONTACTOR	SILICON RECTIFIER	ELECTRIC OVER CURRENT RELAY	LIMIT SWTCH
DESCRIPTION	IM 30	DB 30	M301 , M302	RF 300	EOCR 300	LS-301 , LS-302
	0.75KW x 4P AC 3PH 460V 60Hz	DC 100V	DMC22C	SR-30 AC 220V/DC 100V	SS-05	HY - M904
	0.5KW x 6P AC 3PH 460V 60Hz	DC 100V	DMC22C	SR-30 AC 220V/DC 100V	SS-05	HY - M904
SELECTION MAKER	KUKDONG		DONG-A	ASECO		

MK	DATE	REVISIONS	CHK.	APP.
4				
3				
2				
1				

CUSTOMER		DRAWING	DESIGN	CHECKED	APPROVED	SCALE	DATE	ORDER NO.
DRAWING TITLE	TRAVERSING POWER CONTROL CIRCUIT DIAGRAM					NONE		
		국동호이스트 주식회사 KUK DONG HOIST CO., LTD.				DWG. NO	KDC01E53-DL	

산업안전보건공단 KOREA OCCUPATIONAL SAFETY & HEALTH AGENCY
192.168.11.174 / 2014-07-10 09:30:56

본 배포된 제 품 설계 사양은

불법복제 및 배포금지

1 2 3 4 5 6 7 8 9 10 11 12 13 14 15 16 17 18 19 20.

ADR'S NO.

KDC01BA61

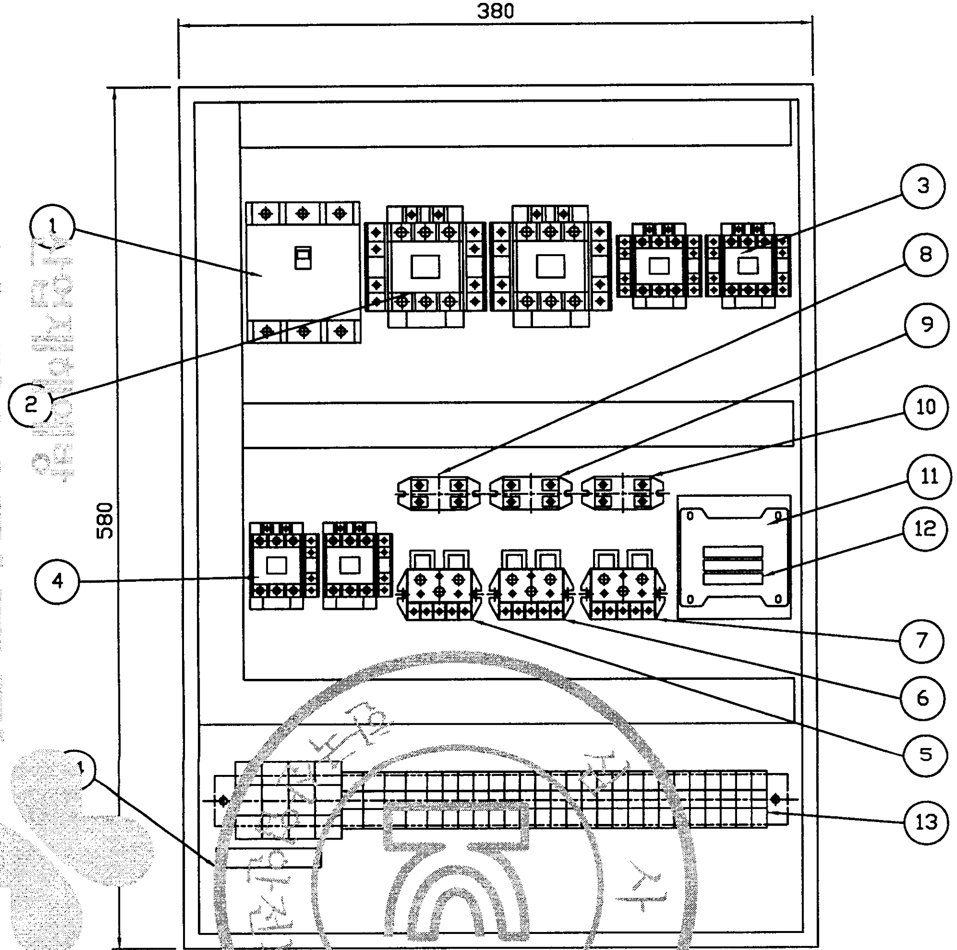

NO	SYMBOL	DESCRIPTIOM	SPECIFICATION	Q'TY	REMARK
1	MCCB100	NO FUSE BREAKER	33AF/10AT	1	HOISTING
2	M101,102	MAG. CONTACTOR	DMC22C	2	HOISTING
3	M111,112	MAG. CONTACTOR	DMC22C	2	CREEP HOIST
4	M301,302	MAG. CONTACTOR	DMC22C	2	TRAVERSING
5	EOCR100	ELECTRONIC OVER CURRENT RELAY	SS-30	1	HOISTING
6	EOCR110	ELECTRONIC OVER CURRENT RELAY	SS-05	1	CREEP HOIST
7	EOCR300	ELECTRONIC OVER CURRENT RELAY	SS-05	1	TRAVERSING
8	RF100	SILICON RECTIFER	SR-30	1	HOISTING
9	RF110	SILICON RECTIFER	SR-30	1	CREEP HOIST
10	RF300	SILICON RECTIFER	SR-30	1	TRAVERSING
11	TR1	TRANSFORMER	480V/110V,120V 60VA	1	
12	F11,12,(13)	FUSE	1A , (2A)	2(1)	
13		TERMINAL BLOCK	35A,15A	1	
14		EARTH TERMINAL	3tx20x50	1	

NOTE
1. UPPER LIMIT LS-1,LS-2의 접점 허용 전류 용량. : AC 600V, 75A
2. POWER SOURCE : AC 3φ 480V 60Hz
3. EARTH TERMINAL RESISTANCE 0.018Ω

NOTE
1. 전선의 색상은 다음과 같다.
   1) 흑색 : 전원선
   2) 적색 : 교류제어선
   3) 주황색 : 외부 전원에서 공급되는 연동장치 제어회로
   4) 녹색 또는 녹색과 노랑 혼용 : 접지선
   5) 청색 : 직류 제어선로
2. CABLE MATERIAL : KIV OR EQUIVALENT
   MIN SIZE : 2.5sq
3. 제어용 전선 : 2.5mm KIV,HIV
4. 제작시 다소 변경 필수있음.
5. 외함 개방구조는 다음과 같을것.
   1) 외함 개방시 충전부분이 차단되도록 할것.
   2) 외함 개방후 충전되어있는 부분은 IP2X 이상의 직접 접촉 방호가 되어있을것.

MK	DATE	REVISIONS	CHK.	APP.

CUSTOMER		DRAWING	DESIGN	CHECKED	APPROVED	SCALE	DATE	ORDER NO.
DRAWING TITLE	HOIST CONTROL BOX / ARRANGEMENT DRAWING	극동호이스트 주식회사 KUK DONG HOIST CO., LTD.				NONE		
						DWG. NO	KDC01BA61	

산업재해예방 안전보건공단 KOREA OCCUPATIONAL SAFETY & HEALTH AGENCY
192.168.11.174 / 2014-07-10 09:38:55

1	2	3	4	5	6	7	8	9	10	11	12	13	14	15	16	17	18	19	20
POWER CIRCUIT																			ADR'S NO.
HOISTING MOTION										CREEP HOIST MOTION									B1

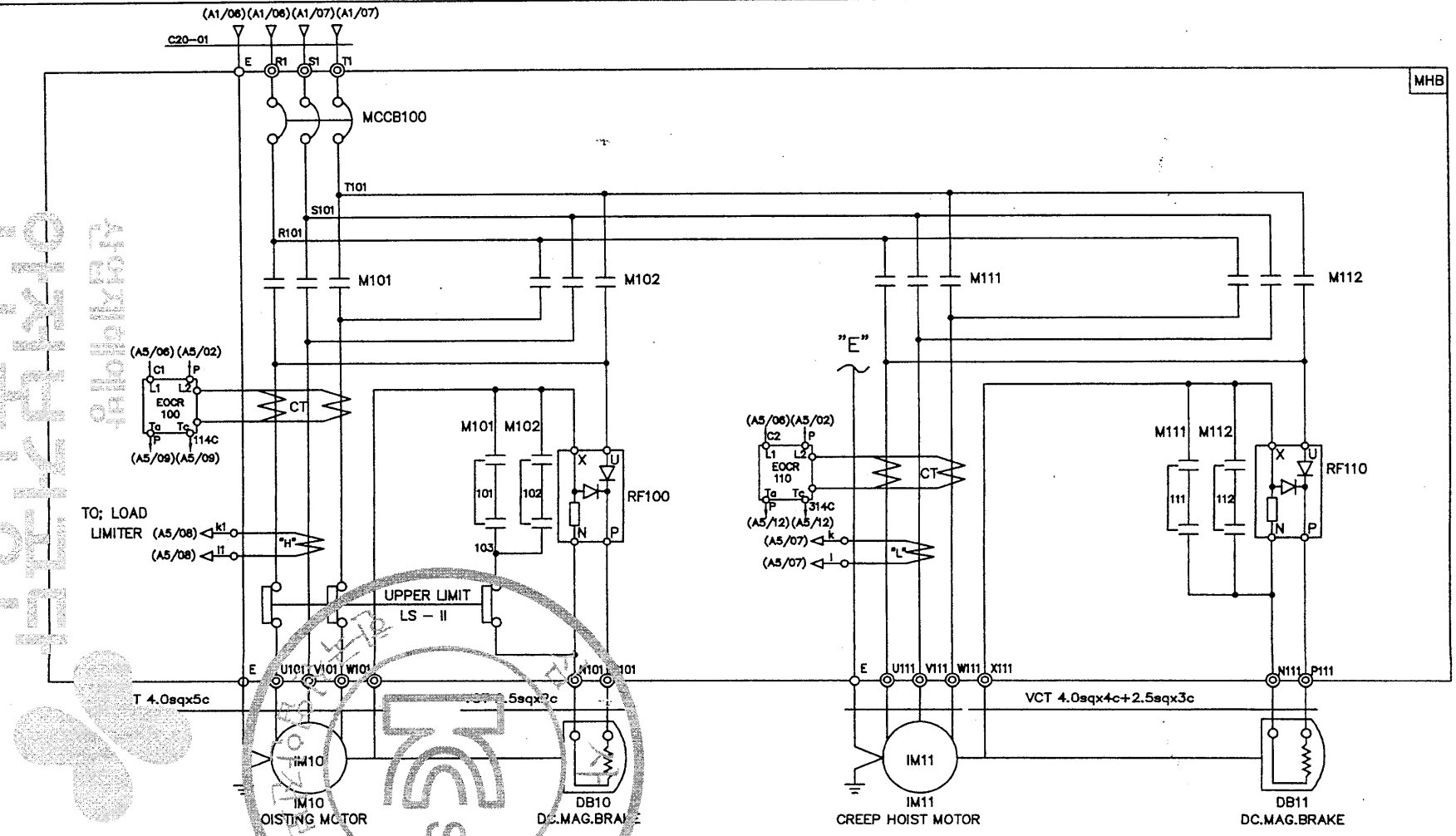

SPECIFICATION / SYMBOLS	HOISTING POWER	HOISTING MOTOR	CREEP MOTOR	DC.MAG BRAKE	NO FUSE BREAKER	TRANSFORMER	FUSE		MAGNET CONTACTOR		UPPER LIMIT	ELECTRIC OVER CURRENT RELAY		SILICON RECTIFIER		LOAD LIMITER	CABLE
DESCRIPTION	HOIST	IM 10	IM 11	DB10, 11	MCCB100	TR 1	F11,F12	F13	M101,M102	M111,M112	LS-I, LS-II	EOCR100	EOCR110	RF100	RF110	LOAD LIMITER	C20-01
	1TON AC 3PH 480V 60Hz	2.4kW 4P	0.4KW 4P	DC 100V	DBE-33AF/10A	480/110V,120V,60VA	1A	2A	DOC-22P	DOC-22P	AC 600V 75A	SS-30	SS-05	SR-30	SR-30	JDL-100	VFCT 4sqx4c
SELECTION / MAKER	KUKDONG				DAERYUK	SHINHAN	-		DAERYUK		KUKDONG	ASAN				JUNGHO	DONGIL

MK	DATE	REVISIONS	CHK.	APP.
4				
3				
2				
1				

CUSTOMER		DRAWING	DESIGN	CHECKED	APPROVED	SCALE	DATE	ORDER NO.
DRAWING TITLE	CREEP HOISTING POWER CONTROL CIRCUIT DIAGRAM					NONE		
						DWG. NO	KDC01E66	

KOREA OCCUPATIONAL SAFETY & HEALTH AGENCY
192.168.11.174 / 2014-07-10 09:38:55

불법복제 및 배포금지

POWER CIRCUIT

TRAVERSING MOTION

ADR'S NO. C1

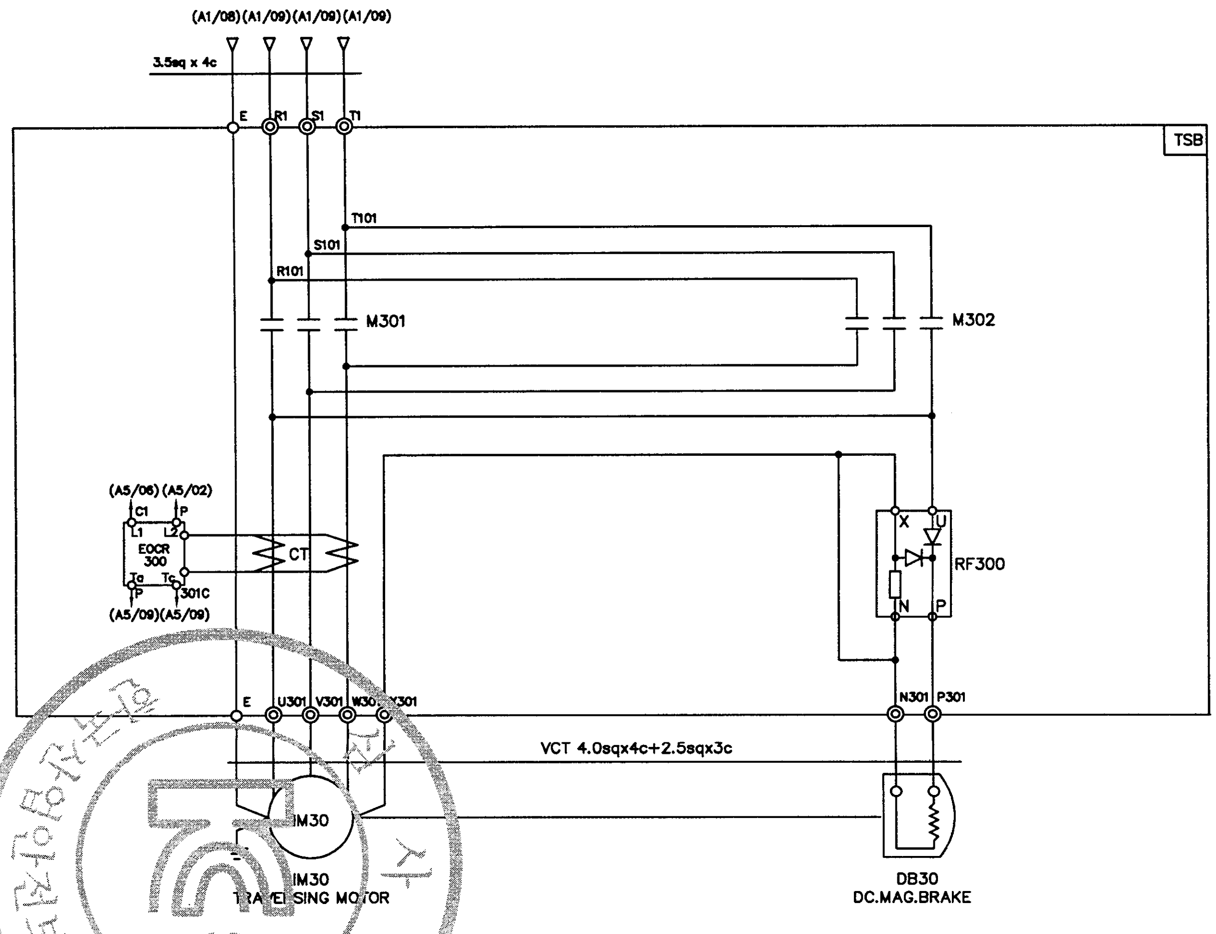

SPECIFICATION / SYMBOLS / DESCRIPTION	TRAVERSING MOTOR	DC MAG' BRAKE	MAGNET CONTACTOR	SILICON RECTIFIER	ELECTRIC OVER CURRENT RELAY	LIMIT SWTCH
	IM 30	DB 30	M301 , M302	RF 300	EOCR 300	LS-301 , LS-302
	0.75KW x 4P AC 3PH 480V 60Hz	DC 100V	DMC22C	SR-30 AC 220V/DC 100V	SS-05	HY – M904
	0.5KW x 6P AC 3PH 480V 60Hz	DC 100V	DMC22C	SR-30 AC 220V/DC 100V	SS-05	HY – M904
SELECTION MAKER	KUKDONG		DONG-A	ASECO		

MK	DATE	REVISIONS	CHK.	APP.
4				
3				
2				
1				

CUSTOMER		DRAWING	DESIGN	CHECKED	APPROVED	SCALE	DATE	ORDER NO.
DRAWING TITLE	TRAVERSING POWER CONTROL CIRCUIT DIAGRAM					NONE		

극동호이스트 주식회사 KUK DONG HOIST CO., LTD.

DWG. NO KDC01E63-DL

산업재해예방 안전보건공단 KOREA OCCUPATIONAL SAFETY & HEALTH AGENCY

192.168.11.174 / 2014-07-10 09:38:55

불법복제 및 배포금지

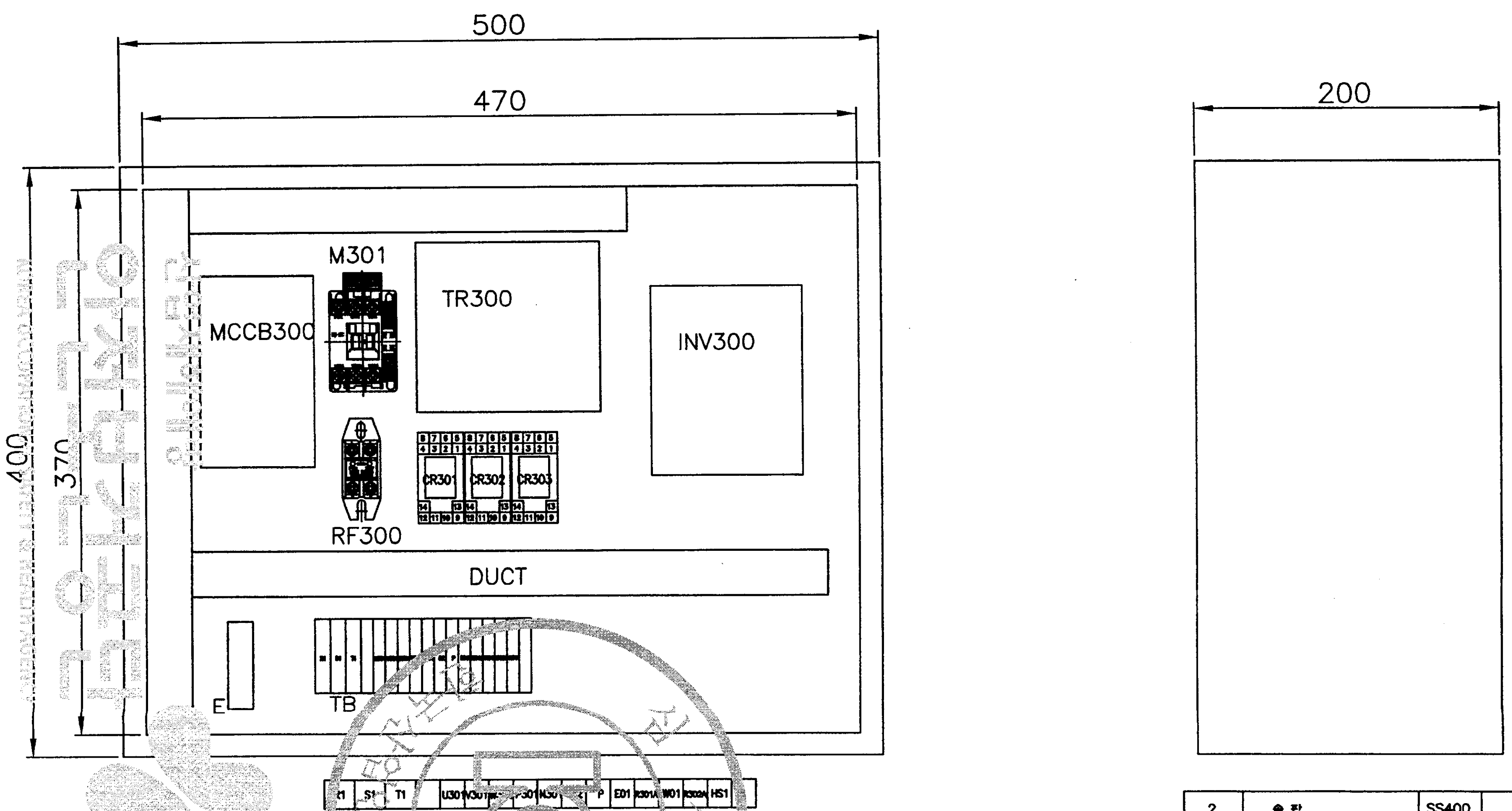

11	EARTH BUS BAR	PUR		1				
10	DU[illegible]	PUR		1				
9	TERMINAL BLOCK	PUR		1				
8	INVERTER	PUR		1				
7	TR	PUR		1				
6	RELAY & SCOKET	PUR		1				
5	RF	PUR		1				
4	MC	PUR		1				
3	MCCB	PUR		1				
2	속 판	SS400		1				
1	T/S BOX	PUR		1				
NO.	DESCRIPTION	MT'L	QT'Y SUB	QT'Y TOTAL	WEIGHT(Kg) SUB	WEIGHT(Kg) TOTAL	REMARKS.	

PROJECT			DATE	DIM
				mm
TITLE	T/S CONTROL PANEL(INVERTER)		SCALE	PROJECTION
			A3/3	3rd
DRAWN	DESIGNED	CHECKED	APPROVED	REF. DRAWING

극동호이스트 주식회사 KUK DONG HOIST CO., LTD.	SHEET No.	DWG No. KD1EI001

심사 한국산업안전보건공단 KCS
산업재해예방 안전보건공단 KOREA OCCUPATIONAL SAFETY & HEALTH AGENCY
192.168.11.174 / 2014-07-10 09:38:55

1	2	3	4	5	6	7	8	9	10	11	12	13	14	15	16	17	18	19	20
								TRAVERSING MOTION											ADR'S NO.
						POWER CIRCUIT DIAGRAM						CONTROL CIRCUIT DIAGRAM							
												BRAKE	EAST		WEST	HIGH SPEED			

KD1EI002

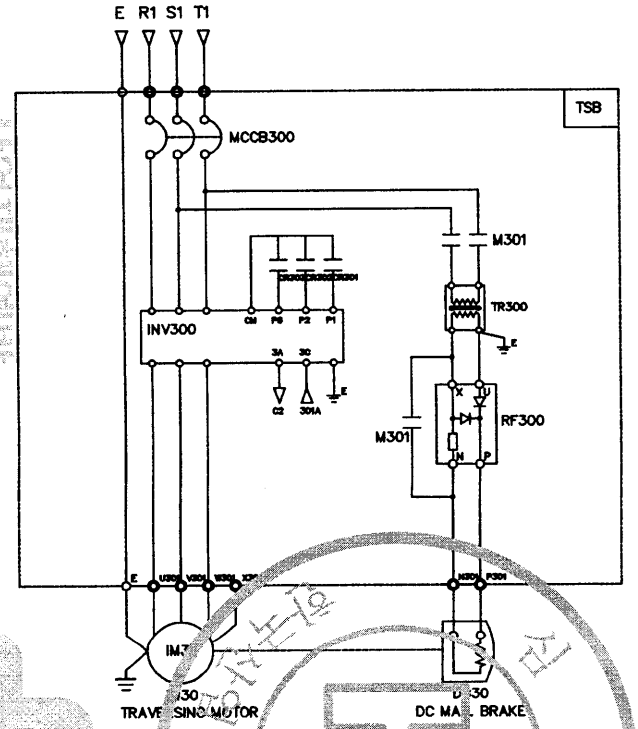

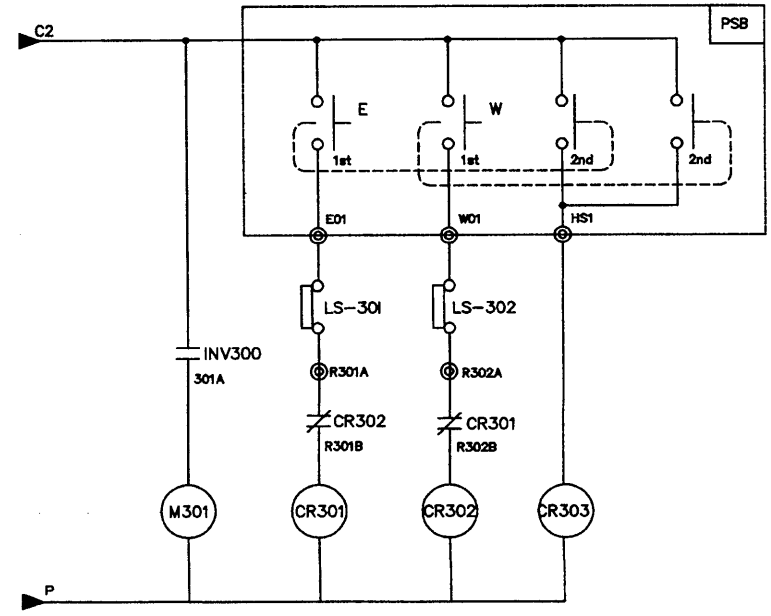

SPECIFICATION / SYMBOLS / DESCRIPTION	TRAVERSING POWER	TRAVERSING MOTOR	DC MAG BRAKE	NO FUSE BREAKER	TRANSFORMER	BRAKE MAGNET	CONTROL RELAY	INVERTER	SILICON RECTIFIER
		IM 30	DB30	MCCB300	TR 300	M301	CR301,302,303	INV300	RF300
	AC 3PH 220V 60Hz	0.4KW x 4P	DC 100V	DBE-33AF/10AT	220/220V,300VA	DM-22C	MINI 4a4b(Coil AC110V)	SV008iG5A-2	SR-30
	AC 3PH 380(440,460,480)V 60Hz	0.4KW x 4P	DC 100V	DBE-33AF/10AT	380(440,460,480)/220V,300VA	DM-22C	MINI 4a4b(Coil AC110V)	SV008iG5A-4	SR-30
	AC 3PH 220V 60Hz	0.2KW x 6P	DC 100V	DBE-33AF/10AT	220/220V,300VA	DM-22C	MINI 4a4b(Coil AC110V)	SV004iG5A-2	SR-30
	AC 3PH 380(440,460,480)V 60Hz	0.2KW x 6P	DC 100V	DBE-33AF/10AT	380(440,460,480)/220V,300VA	DM-22C	MINI 4a4b(Coil AC110V)	SV004iG5A-4	SR-30
SELECTION MAKER	KUK DONG HOIST							LS	ASAN

MK	DATE	REVISIONS	CHK.	APP.
4				
3				
2				
1				

CUSTOMER	INVERTER CONTROL
DRAWING TITLE	TRAVERSING POWER & CONTROL CIRCUIT DIAGRAM

DRAWING	DESIGN	CHECKED	APPROVED	SCALE	DATE	ORDER NO.

국동호이스트 주식회사
KUK DONG HOIST CO., LTD.

DWG. NO KD1EI002

불법복제 및 배포금지

192.168.11.174 / 2014-07-10 09:08:55

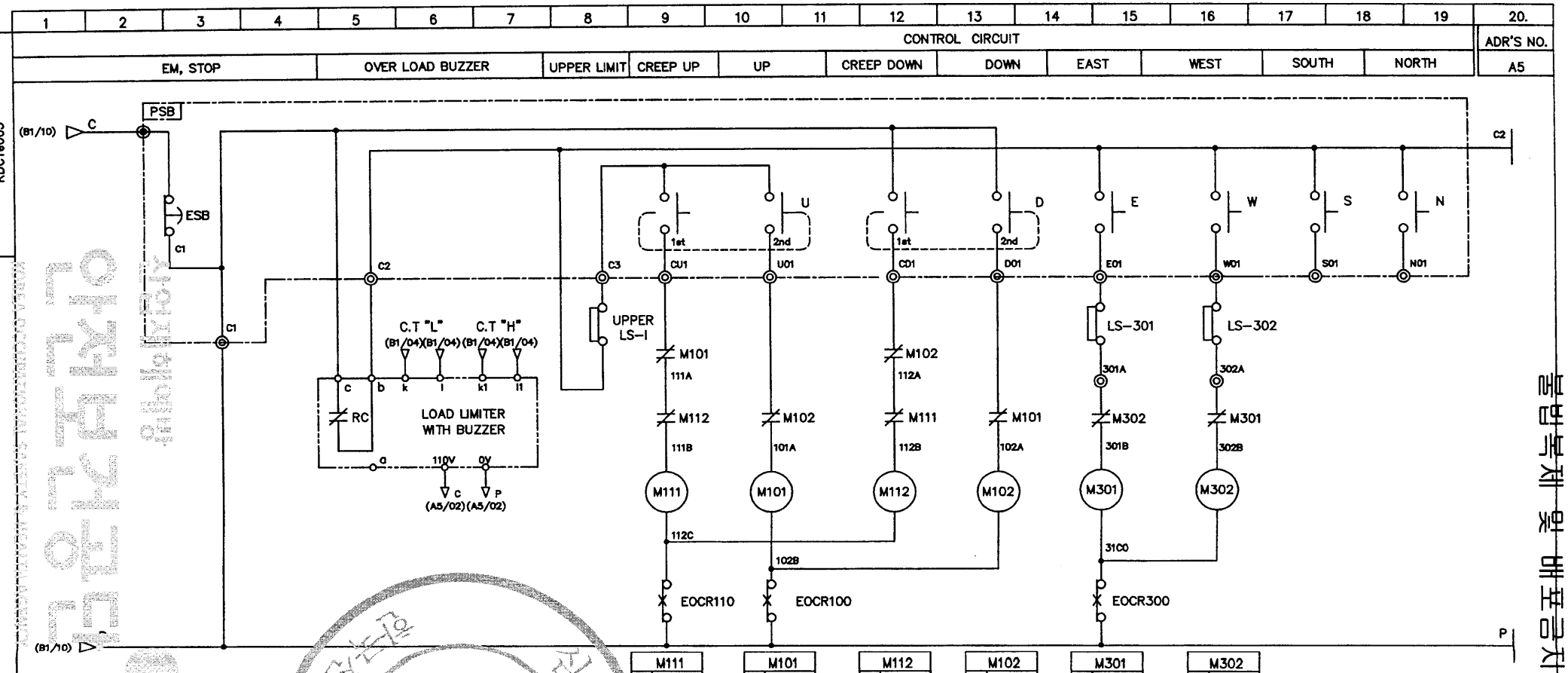

SPECIFICATION / SYMBOLS / DESCRIPTION	UPPER LIMIT	PENDANT P.B S/W	LOAD LIMITER	LIMIT SWITCH
	LS-1	E.S.B	LOAD LIMITER	LS-301,302
	AC 600V 75A	250V 3A	JDL-100	HY - W904
	AC 600V 3A	250V 3A	JDL-100	HY - W904
MAKER	KUKDONG	KUNHUNG	JEUNGHO	HANYOUNG

MK	DATE	REVISIONS	CHK.	APP.
4				
3				
2				
1				

CUSTOMER		DRAWING	DESIGN	CHECKED	APPROVED	SCALE	DATE	ORDER NO.
DRAWING TITLE	MAIN POWER 2 & CONTROL CIRCUIT DIAGRAM					NONE		
		국동호이스트 주식회사 KUK DONG HOIST CO., LTD.				DWG. NO	KDC1E005	

192.168.11.174 / 2014-07-10 09:00:55

불법복제 및 배포금지

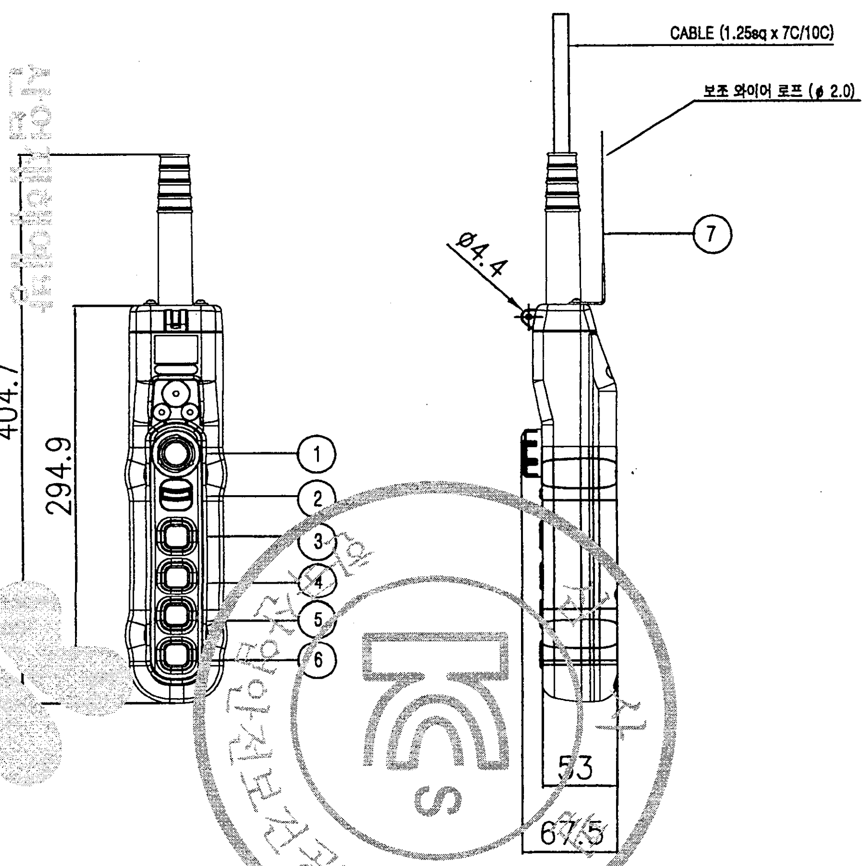

색상 \ 구분	조작버튼	표시등
적색	비상	비상
황색	비정상	비정상
녹색	정상	정상
청색	의무	의무
흰색,회색–흑색	지정된의미없음	기타

* MATERIAL : POLYCARBOBATE(PLASTIC)
* BODY COLOR : YELLOW, BLACK
* IP : 55 이상

NO	SYMBOL	TYPE	SPEC.	COLOR
1	E.B.S	PUSH LOCK TURN RESET TYPE	250VAC x 6A	RED
2	SPARE			BLACK
3	상	PUSH BUTTON(2STEP)		
4	하	PUSH BUTTON(2STEP)		
5	동(전)	PUSH BUTTON		
6	서(후)	PUSH BUTTON		
7	보조 와이어	ϕ 2.0		

MK	DATE	REVISIONS	CHK.	APP.	CUSTOMER		DRAWING	DESIGN	CHECKED	APPROVED	SCALE	DATE
△3					DRAWING TITLE	PENDANT PUSH BUTTON SWITCH / LAY OUT	KD KUK DONG HOIST CO., LTD.			DWG. NO		
△2												
△1												

산업재해예방 안전보건공단 KOREA OCCUPATIONAL SAFETY & HEALTH AGENCY
192.168.11.174 / 2014-07-10 09:38:55

불법복제 및 배포금지

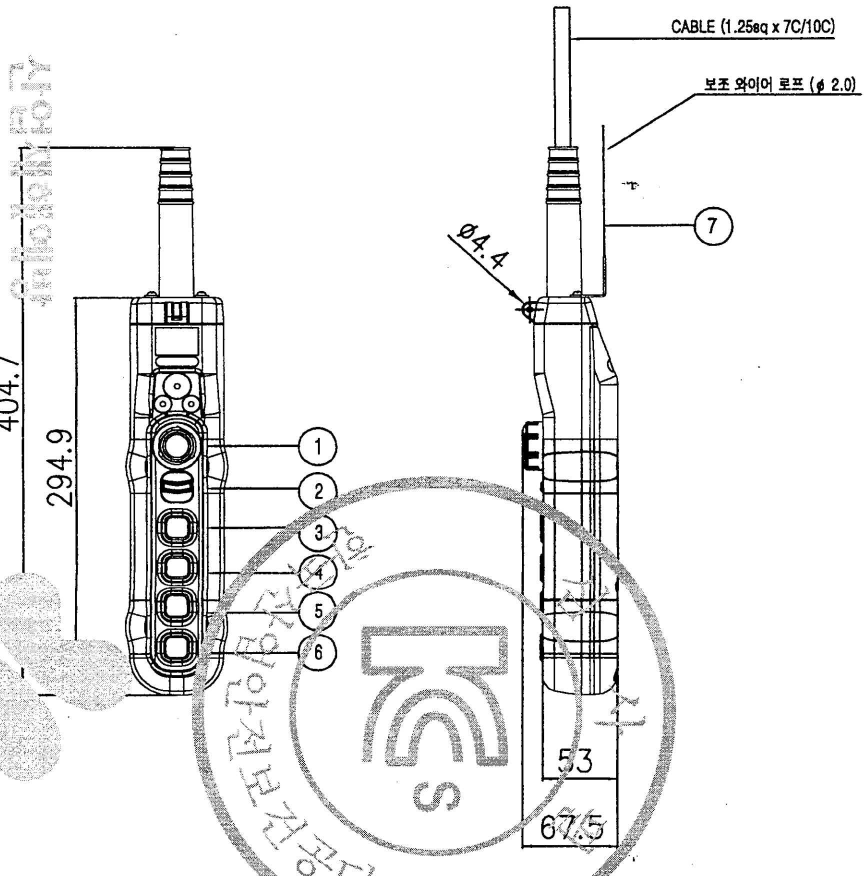

색상 \ 구분	조작버튼	표시등
적색	비상	비상
황색	비정상	비정상
녹색	정상	정상
청색	의무	의무
흰색,회색-흑색	지정된의미없음	기타

* MATERIAL : POLYCARBOBATE(PLASTIC)
* BODY COLOR : YELLOW, BLACK
* IP : 55 이상

NO	SYMBOL	TYPE	SPEC.	COLOR
1	E.B.S	PUSH LOCK TURN RESET TYPE	250VAC x 6A	RED
2	SPARE			BLACK
3	상	PUSH BUTTON(2STEP)		
4	하	PUSH BUTTON(2STEP)		
5	동(전)	PUSH BUTTON(2STEP)		
6	서(후)	PUSH BUTTON(2STEP)		
7	보조 와이어	φ 2.0		

MK	DATE	REVISIONS	CHK.	APP.
3				
2				
1				

CUSTOMER		DRAWING	DESIGN	CHECKED	APPROVED	SCALE	DATE
DRAWING TITLE	PENDANT PUSH BUTTON SWITCH LAY OUT	KD KUK DONG HOIST CO., LTD.			DWG. NO		

KS 한국산업안전보건공단
산업재해예방 안전보건공단
KOREA OCCUPATIONAL SAFETY & HEALTH AGENCY
192.168.11.174 / 2014-07-10 09:38:55

불법복제 및 배포금지

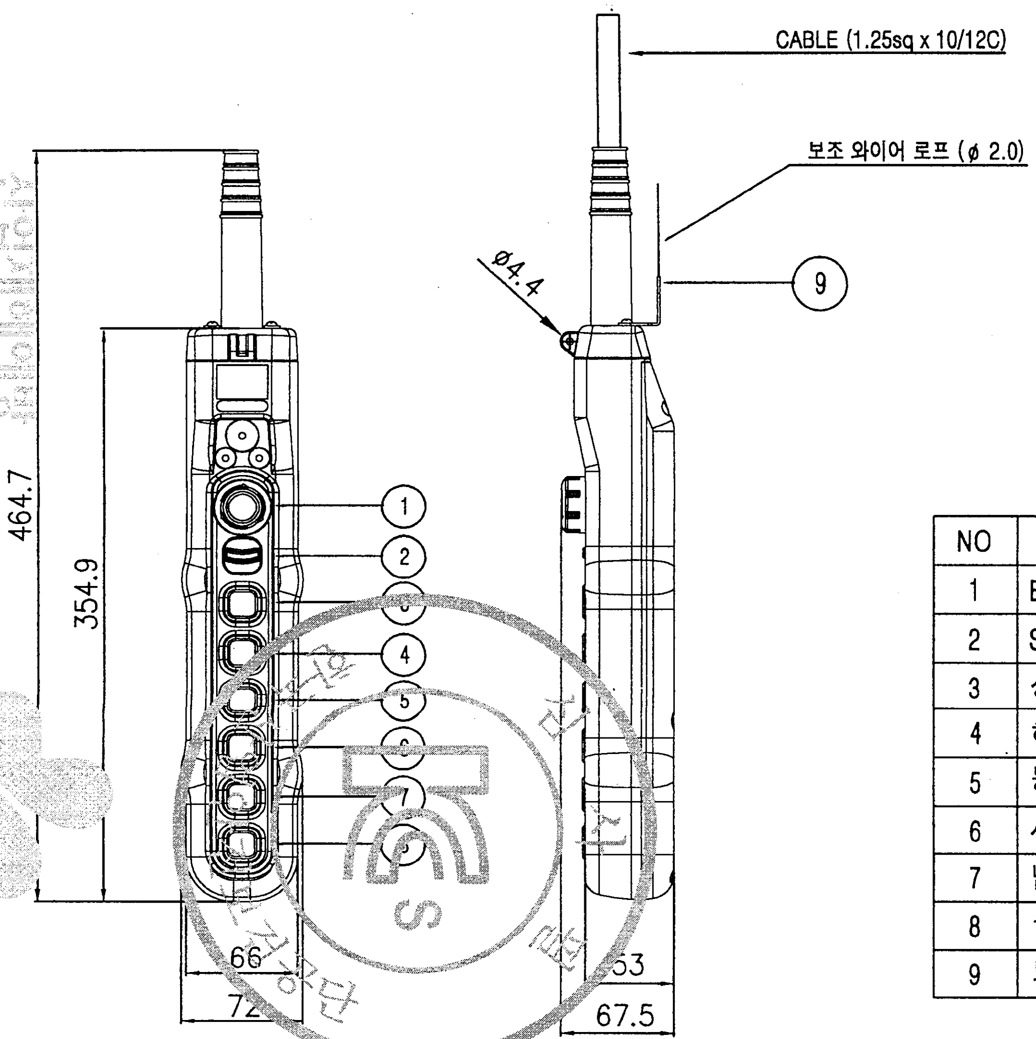

색상 \ 구분	조작버튼	표시등
적색	비상	비상
황색	비정상	비정상
녹색	정상	정상
청색	의무	의무
흰색,회색-흑색	지정된의미없음	기타

* MATERIAL : POLYCARBOBATE(PLASTIC)
* BODY COLOR : YELLOW, BLACK
* IP : 55 이상

NO	SYMBOL	TYPE	SPEC.	COLOR
1	E.B.S	PUSH LOCK TURN RESET TYPE	250VAC x 6A	RED
2	SPARE			BLACK
3	상	PUSH BUTTON(2STEP)		
4	하	PUSH BUTTON(2STEP)		
5	동 (좌)	PUSH BUTTON		
6	서 (우)	PUSH BUTTON		
7	남 (전)	PUSH BUTTON		
8	북 (후)	PUSH BUTTON		
9	보조 WIRE	ϕ 2.0		

MK	DATE	REVISIONS	CHK.	APP.	CUSTOMER		DRAWING	DESIGN	CHECKED	APPROVED	SCALE	DATE
3					DRAWING TITLE	PENDANT PUSH BUTTON SWITCH / LAY OUT	KD KUK DONG HOIST CO., LTD.			DWG. NO		
2												
1												

산업재해예방 안전보건공단 KOREA OCCUPATIONAL SAFETY & HEALTH AGENCY
192.168.11.174 / 2014-07-10 09:38:55

불법복제 및 배포금지

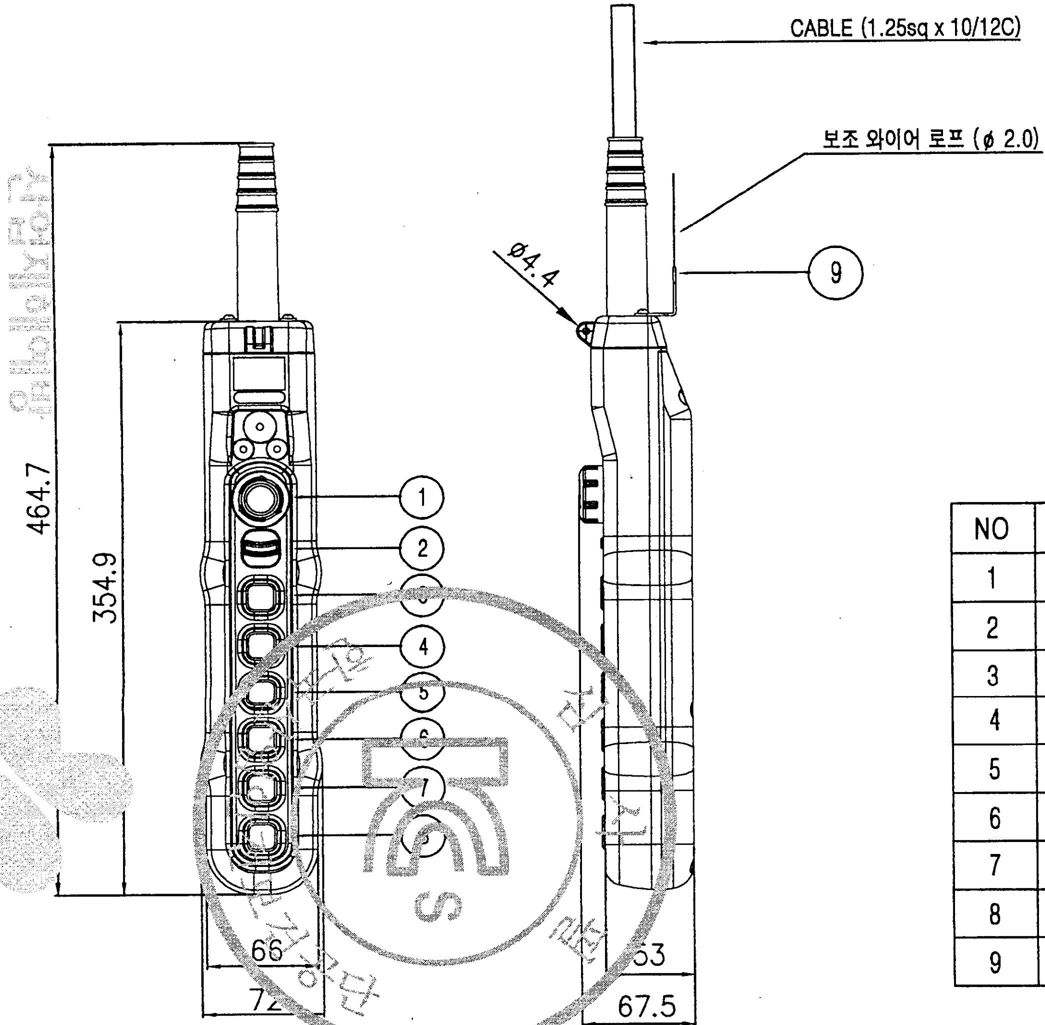

색상 \ 구분	조작버튼	표시등
적색	비상	비상
황색	비정상	비정상
녹색	정상	정상
청색	의무	의무
흰색,회색-흑색	지정된의미없음	기타

* MATERIAL : POLYCARBOBATE(PLASTIC)
* BODY COLOR : YELLOW, BLACK
* IP : 55 이상

NO	SYMBOL	TYPE	SPEC.	COLOR
1	E.B.S	PUSH LOCK TURN RESET TYPE	250VAC x 6A	RED
2	SPARE			BLACK
3	상	PUSH BUTTON(2STEP)		
4	하	PUSH BUTTON(2STEP)		
5	동 (좌)	PUSH BUTTON(2STEP)		
6	서 (우)	PUSH BUTTON(2STEP)		
7	남 (전)	PUSH BUTTON		
8	북 (후)	PUSH BUTTON		
9	보조 WIRE	ϕ 2.0		

MK	DATE	REVISIONS	CHK.	APP.
3				
2				
1				

CUSTOMER		DRAWING	DESIGN	CHECKED	APPROVED	SCALE	DATE
DRAWING TITLE	PENDANT PUSH BUTTON SWITCH / LAY OUT	KD KUK DONG HOIST CO., LTD.			DWG. NO		

산업재해예방 안전보건공단
KOREA OCCUPATIONAL SAFETY & HEALTH AGENCY
192.168.11.174 / 2014-07-10 08:38:55

불법복제 및 배포금지

Ⅳ. 참 고 도 서

1 LOAD LIMITER 권고 SETTING 치
2 E.O.C.R 권고 SETTING치
3 MOTOR DATA SHEET
4 WIRE ROPE 성적서
5 SUB VENDOR LIST
6 HOIST 취급설명서
7 과부하 방지장치 취급설명서
8 INVERTER 취급설명서

심사필
KCS
한국산업안전보건공단

산업재해예방
안전보건공단
KOREA OCCUPATIONAL SAFETY & HEALTH AGENCY

192.168.11.174 / 2014-07-10 09:38:55

LOAD LIMITER 권고 SETTING치

* POWER SOURCE : AC 3¢ 220V 60Hz

극동호이스트(주)

HOIST	MOTOR 용량	LOAD LIMITER 권고 SETTING치			LOAD CURRENT		C.T MODEL	연결단자 NO	C.T 용량	REMARK
		LOAD CURRENT	ADJ START TIME	SHOCK TIME	100%	110%				
C[illegible] TON	2.4KW x 4P	110%	1 SEC	1 SEC	10 A	11.2 A	CT-2	K-K1, L-L1	5 V.A	
	0.4KW x 4P	110%	1 SEC	1 SEC	2.7 A	3.1 A	CT-1	K-K1, L-L1	5 V.A	
C2 TON	3.7KW x 4P	110%	1 SEC	1 SEC	16.0 A	17.4 A	CT-2	K-K1, L-L1	5 V.A	
	0.4KW x 4P	110%	1 SEC	1 SEC	2.7 A	3.1 A	CT-1	K-K1, L-L1	5 V.A	
C2.5 TON	5.0KW x 4P	110%	1 SEC	1 SEC	22.8 A	24.2 A	CT-2	K-K1, L-L1	5 V.A	
	1.5KW x 4P	110%	1 SEC	1 SEC	7.3 A	8.3 A	CT-1	K-K1, L-L1	5 V.A	
[illegible] TON	5.5KW x 4P	110%	1 SEC	1 SEC	22.8 A	24.3 A	CT-2	K-K1, L-L1	5 V.A	
	1.5KW x 4P	110%	1 SEC	1 SEC	7.3 A	8.3 A	CT-1	K-K1, L-L1	5 V.A	
C5 TON	5.5KW x 6P	110%	1 SEC	1 SEC	28.2 A	30.1 A	CT-2	K-K1, L-L1	5 V.A	
	1.0KW x 6P	110%	1 SEC	1 SEC	6.7 A	8.1 A	CT-1	K-K1, L-L1	5 V.A	
C7.5 T[illegible]	5.5KW x 6P	110%	1 SEC	1 SEC	28.2 A	30.1 A	CT-2	K-K1, L-L1	5 V.A	
	1.0KW x 6P	110%	1 SEC	1 SEC	6.7 A	8.1 A	CT-1	K-K1, L-L1	5 V.A	
C[illegible]	[illegible]KW x [illegible]P	110%	1 SEC	1 SEC	45.0 A	49.1 A	CT-2	K-K1, L-L1	5 V.A	
	1.1KW x [illegible]P	110%	1 SEC	1 SEC	8.0 A	9.6 A	CT-2	K-K1, L-L1	5 V.A	

NOTE

1. 상기 TABLE의 수치는 권고 SETTING 수치이며 MOTOR의 특성 및 현장 조건에 따라 변경 가능함.

192.168.11.174 / 2014-07-10 09:38:55

불법복제 및 배포금지

불법복제 및 배포금지

LOAD LIMITER 권고 SETTING치

* POWER SOURCE : AC 3∅ 380V 60Hz

극동호이스트(주)

HOIST	MOTOR 용량	LOAD LIMITER 권고 SETTING치			LOAD CURRENT		C.T MODEL	연결단자 NO	C.T 용량	REMARK
		LOAD CURRENT	ADJ START TIME	SHOCK TIME	100%	110%				
C1 TON	2.4KW x 4P	110%	1 SEC	1 SEC	5.8 A	6.3 A	CT-2	K-K1, L-L1	5 V.A	
	0.4KW x 4P	110%	1 SEC	1 SEC	1.6 A	2.1 A	CT-1	K-K1, L-L1	5 V.A	
C2 TON	3.7KW x 4P	110%	1 SEC	1 SEC	9.3 A	11.3 A	CT-2	K-K1, L-L1	5 V.A	
	0.4KW x 4P	110%	1 SEC	1 SEC	1.6 A	2.1 A	CT-1	K-K1, L-L1	5 V.A	
C2.[illegible] TON	5.0KW x 4P	110%	1 SEC	1 SEC	12.2 A	13.6 A	CT-2	K-K1, L-L1	5 V.A	
	1.5KW x 4P	110%	1 SEC	1 SEC	4.2 A	5.4 A	CT-1	K-K1, L-L1	5 V.A	
C[illegible] TON	5.5KW x 4P	110%	1 SEC	1 SEC	12.2 A	13.6 A	CT-2	K-K1, L-L1	5 V.A	
	1.5KW x 4P	110%	1 SEC	1 SEC	4.2 A	5.4 A	CT-1	K-K1, L-L1	5 V.A	
C[illegible] TON	5.5KW x 6P	110%	1 SEC	1 SEC	16.3 A	17.8 A	CT-2	K-K1, L-L1	5 V.A	
	1.0KW x 6P	110%	1 SEC	1 SEC	3.9 A	5.3 A	CT-1	K-K1, L-L1	5 V.A	
C7.5 TON	5.5KW x 6[illegible]	110%	1 SEC	1 SEC	16.3 A	17.8 A	CT-2	K-K1, L-L1	5 V.A	
	[illegible]W x [illegible]P	110%	1 SEC	1 SEC	3.9 A	5.3 A	CT-1	K-K1, L-L1	5 V.A	
C10 T[illegible]	9.0KW x [illegible]P	110%	1 SEC	1 SEC	26.0 A	28.6 A	CT-2	K-K1, L-L1	5 V.A	
	1.1KW x [illegible]P	110%	1 SEC	1 SEC	4.6 A	6.1 A	CT-2	K-K1, L-L1	5 V.A	

NOTE
1. 상기 TABLE의 수치는 권고 SETTING 수치이며 MOTOR의 특성 및 현장 조건에 따라 변경 가능함.

산업재해예방 안전보건공단
KOREA OCCUPATIONAL SAFETY & HEALTH AGENCY
192.168.11.174 / 2014-07-10 09:38:55

불법복제 및 배포금지

LOAD LIMITER 권고 SETTING치

* POWER SOURCE : AC 3 ∅ 440V 60Hz

극동호이스트(주)

HOIST	MOTOR 용량	LOAD LIMITER 권고 SETTING치			LOAD CURRENT		C.T MODEL	연결단자 NO	C.T 용량	REMARK
		LOAD CURRENT	ADJ START TIME	SHOCK TIME	100%	110%				
C1 TON	2.4KW x 4P	110%	1 SEC	1 SEC	5.0 A	7.3 A	CT-2	K-K1, L-L1	5 V.A	
	0.4KW x 4P	110%	1 SEC	1 SEC	1.4 A	1.8 A	CT-1	K-K1, L-L1	5 V.A	
C2 TON	3.7KW x 4P	110%	1 SEC	1 SEC	8.0 A	10.8 A	CT-2	K-K1, L-L1	5 V.A	
	0.4KW x 4P	110%	1 SEC	1 SEC	1.4 A	1.8 A	CT-1	K-K1, L-L1	5 V.A	
C2.8 TON	5.0KW x 4P	110%	1 SEC	1 SEC	10.5 A	13.7 A	CT-2	K-K1, L-L1	5 V.A	
	1.5KW x 4P	110%	1 SEC	1 SEC	3.7 A	4.3 A	CT-1	K-K1, L-L1	5 V.A	
C3 TON	5.5KW x 4P	110%	1 SEC	1 SEC	10.5 A	13.7 A	CT-2	K-K1, L-L1	5 V.A	
	1.5KW x 4P	110%	1 SEC	1 SEC	3.7 A	4.3 A	CT-1	K-K1, L-L1	5 V.A	
C5 TON	5.5KW x 6P	110%	1 SEC	1 SEC	14.1 A	18.5 A	CT-2	K-K1, L-L1	5 V.A	
	1.0KW x 6P	110%	1 SEC	1 SEC	3.3 A	4.7 A	CT-1	K-K1, L-L1	5 V.A	
C7.5 TON	5.5KW x 6P	110%	1 SEC	1 SEC	14.1 A	18.5 A	CT-2	K-K1, L-L1	5 V.A	
	[illegible]KW x 6P	110%	1 SEC	1 SEC	3.3 A	4.7 A	CT-1	K-K1, L-L1	5 V.A	
C10 TON	[illegible]KW x 8P	110%	1 SEC	1 SEC	22.5 A	24.8 A	CT-2	K-K1, L-L1	5 V.A	
	1.1KW x 8P	110%	1 SEC	1 SEC	4.0 A	5.4 A	CT-1	K-K1, L-L1	5 V.A	

NOTE

1. 상기 TABLE의 수치는 권고 SETTING 수치이며 MOTOR의 특성 및 현장 조건에 따라 변경 가능함.

산업재해예방 안전보건공단
KOREA OCCUPATIONAL SAFETY & HEALTH AGENCY
192.168.11.174 / 2014-07-10 09:38:55

불법복제 및 배포금지

LOAD LIMITER 권고 SETTING치

* POWER SOURCE : AC 3φ 460V 60Hz

극동호이스트(주)

HOIST	MOTOR 용량	LOAD LIMITER 권고 SETTING치			LOAD CURRENT		C.T MODEL	연결단자 NO	C.T 용량	REMARK
		LOAD CURRENT	ADJ START TIME	SHOCK TIME	100%	110%				
C1 TON	2.4KW x 4P	110%	1 SEC	1 SEC	4.8 A	5.2 A	CT-2	K-K1, L-L1	5 V.A	
	0.4KW x 4P	110%	1 SEC	1 SEC	1.3 A	1.5 A	CT-1	K-K1, L-L1	5 V.A	
C2 TON	3.7KW x 4P	110%	1 SEC	1 SEC	7.7 A	8.5 A	CT-2	K-K1, L-L1	5 V.A	
	0.4KW x 4P	110%	1 SEC	1 SEC	1.3 A	1.5 A	CT-1	K-K1, L-L1	5 V.A	
C2.[illegible] TON	5.0KW x 4P	110%	1 SEC	1 SEC	10.0 A	11.5 A	CT-2	K-K1, L-L1	5 V.A	
	1.5KW x 4P	110%	1 SEC	1 SEC	3.5 A	4.3 A	CT-1	K-K1, L-L1	5 V.A	
C[illegible] TON	5.5KW x 4P	110%	1 SEC	1 SEC	10.0 A	11.5 A	CT-2	K-K1, L-L1	5 V.A	
	1.5KW x 4P	110%	1 SEC	1 SEC	3.5 A	4.3 A	CT-1	K-K1, L-L1	5 V.A	
C[illegible] TON	5.5KW x 6P	110%	1 SEC	1 SEC	13.5 A	14.7 A	CT-2	K-K1, L-L1	5 V.A	
	1.0KW x 6P	110%	1 SEC	1 SEC	3.2 A	3.6 A	CT-1	K-K1, L-L1	5 V.A	
C7.5 TON	5.5KW x 6P	110%	1 SEC	1 SEC	13.5 A	14.7 A	CT-2	K-K1, L-L1	5 V.A	
	[illegible]KW x 6P	110%	1 SEC	1 SEC	3.2 A	3.6 A	CT-1	K-K1, L-L1	5 V.A	
C10 TON	9.0KW x 8P	110%	1 SEC	1 SEC	21.5 A	23.7 A	CT-2	K-K1, L-L1	5 V.A	
	1.1KW x 8P	110%	1 SEC	1 SEC	4.0 A	5.4 A	CT-1	K-K1, L-L1	5 V.A	

NOTE

1. 상기 TABLE의 수치는 권고 SETTING 수치이며 MOTOR의 특성 및 현장 조건에 따라 변경 가능함.

산업재해예방 안전보건공단
KOREA OCCUPATIONAL SAFETY & HEALTH AGENCY
192.168.11.174 / 2014-07-10 09:38:55

LOAD LIMITER 권고 SETTING치

* POWER SOURCE : AC 3 ¢ 480V 60Hz

극동호이스트(주)

HOIST	MOTOR 용량	LOAD LIMITER 권고 SETTING치			LOAD CURRENT		C.T MODEL	연결단자 NO	C.T 용량	REMARK
		LOAD CURRENT	ADJ START TIME	SHOCK TIME	100%	110%				
C1 TON	2.4KW x 4P	110%	1 SEC	1 SEC	4.6 A	5.0 A	CT-2	K-K1, L-L1	5 V.A	
	0.4KW x 4P	110%	1 SEC	1 SEC	1.2 A	1.35 A	CT-1	K-K1, L-L1	5 V.A	
C2 TON	3.7KW x 4P	110%	1 SEC	1 SEC	7.3 A	8.2 A	CT-2	K-K1, L-L1	5 V.A	
	0.4KW x 4P	110%	1 SEC	1 SEC	1.2 A	1.35 A	CT-1	K-K1, L-L1	5 V.A	
C2.5 TON	5.0KW x 4P	110%	1 SEC	1 SEC	9.6 A	11.2 A	CT-2	K-K1, L-L1	5 V.A	
	1.5KW x 4P	110%	1 SEC	1 SEC	3.4 A	4.3 A	CT-1	K-K1, L-L1	5 V.A	
C3 TON	5.5KW x 4P	110%	1 SEC	1 SEC	9.6 A	11.2 A	CT-2	K-K1, L-L1	5 V.A	
	1.5KW x 4P	110%	1 SEC	1 SEC	3.4 A	4.3 A	CT-1	K-K1, L-L1	5 V.A	
C5 TON	5.5KW x 6P	110%	1 SEC	1 SEC	12.9 A	14.2 A	CT-2	K-K1, L-L1	5 V.A	
	1.0KW x 6P	110%	1 SEC	1 SEC	3.1 A	3.5 A	CT-1	K-K1, L-L1	5 V.A	
C7.5 TON	5.5KW x 6P	110%	1 SEC	1 SEC	12.9 A	14.2 A	CT-2	K-K1, L-L1	5 V.A	
	[illegible]W x 6P	110%	1 SEC	1 SEC	3.1 A	3.5 A	CT-1	K-K1, L-L1	5 V.A	
C10 TON	[illegible]KW x [illegible]P	110%	1 SEC	1 SEC	20.6 A	22.7 A	CT-2	K-K1, L-L1	5 V.A	
	1.1KW x 6P	110%	1 SEC	1 SEC	4.0 A	5.4 A	CT-1	K-K1, L-L1	5 V.A	

NOTE

1. 상기 TABLE의 수치는 권고 SETTING 수치이며 MOTOR의 특성 및 현장 조건에 따라 변경 가능함.

불법복제 및 배포금지

192.168.11.174 / 2014-07-10 09:33:55

E.O.C.R 권고 SETTING치

* POWER SOURCE : AC 3Φ 220V 60Hz

극동호이스트(주)

HOIST	MOTOR 용량	MOTOR 정격 전류	DRIVE TYPE	E.O.C.R TYPE	권고 SETTING 치			REMARK
					DELAY TIME	OPERATION TIME	CURRENT	
C1 TON	2.4KW x 4P	10.0 A	1 DRAVE	SS-30	3 SEC	1 SEC	10.0 A	
	0.4KW x 4P	2.7 A	1 DRAVE	SS-05	3 SEC	1 SEC	2.7 A	
C2 TON	3.7KW x 4P	16.0 A	1 DRAVE	SS-30	3 SEC	1 SEC	16.0 A	
	0.4KW x 4P	2.7 A	1 DRAVE	SS-05	3 SEC	1 SEC	2.7 A	
C2.8 TON	5.0KW x 4P	22.8 A	1 DRAVE	SS-30	3 SEC	1 SEC	22.8 A	
	1.5KW x 4P	7.3 A	1 DRAVE	SS-30	3 SEC	1 SEC	7.3 A	
C3 TON	5.5KW x 4P	22.8 A	1 DRAVE	SS-30	3 SEC	1 SEC	22.8 A	
	1.5KW x 4P	7.3 A	1 DRAVE	SS-30	3 SEC	1 SEC	7.3 A	
C5 TON	5.5KW x 6P	28.2 A	1 DRAVE	SS-30	3 SEC	1 SEC	28.2 A	
	1.0KW x 6P	6.7 A	1 DRAVE	SS-30	3 SEC	1 SEC	6.7 A	
C7.5 TON	5.5KW x 6P	28.2 A	1 DRAVE	SS-30	3 SEC	1 SEC	28.2 A	
	1.0KW x 6P	6.7 A	1 DRAVE	SS-30	3 SEC	1 SEC	6.7 A	
C10 TON	9.0KW x 8P	45.0 A	1 DRAVE	SS-60	3 SEC	1 SEC	45.0 A	
	1.1KW x 8P	8.0 A	1 DRAVE	SS-30	3 SEC	1 SEC	8.0 A	

NOTE

1. 상기 TABLE의 수치는 권고 SETTING 수치이며 MOTOR의 특성 및 현장 조건에 따라 변경 가능함.

불법복제 및 배포금지

192.168.11.174 / 2014-02-10 09:38:55

불법복제 및 배포금지

E.O.C.R 권고 SETTING치

* POWER SOURCE : AC 3 ∅ 380V 60Hz

극동호이스트(주)

HOIST	MOTOR 용량	1 정격 전류	DRIVE TYPE	E.O.C.R TYPE	권고 SETTING 치			REMARK
					DELAY TIME	OPERATION TIME	CURRENT	
C1 TON	2.4KW x 4P	5.8 A	1 DRAVE	SS-30	3 SEC	1 SEC	5.8 A	
	0.4KW x 4P	1.6 A	1 DRAVE	SS-05	3 SEC	1 SEC	1.6 A%	
C2 TON	3.7KW x 4P	9.3 A	1 DRAVE	SS-30	3 SEC	1 SEC	9.3 A	
	0.4KW x 4P	1.6 A	1 DRAVE	SS-05	3 SEC	1 SEC	1.6 A	
C2.8 TON	5.0KW x 4P	12.2 A	1 DRAVE	SS-30	3 SEC	1 SEC	12.2 A	
	1.5KW x 4P	4.2 A	1 DRAVE	SS-05	3 SEC	1 SEC	4.2 A	
C3 TON	5.5KW x 4P	12.2 A	1 DRAVE	SS-30	3 SEC	1 SEC	12.2 A	
	1.5KW x 4P	4.2 A	1 DRAVE	SS-05	3 SEC	1 SEC	4.2 A	
C5 TON	5.5KW x 6P	16.3 A	1 DRAVE	SS-30	3 SEC	1 SEC	16.3 A	
	1.0KW x 6P	3.9 A	1 DRAVE	SS-05	3 SEC	1 SEC	3.9 A	
C7.5 TON	5.5KW x 6P	16.3 A	1 DRAVE	SS-30	3 SEC	1 SEC	16.3 A	
	1.0KW x 6P	3.9 A	1 DRAVE	SS-05	3 SEC	1 SEC	3.9 A	
[illegible] TON	9.0KW x 8P	26.0 A	1 DRAVE	SS-30	3 SEC	1 SEC	26.0 A	
	1.1KW x 6P	[illegible]	1 DRAVE	SS-05	3 SEC	1 SEC	4.6 A	

NOTE

1. 상기 TABLE의 수치는 권고 SETTING 수치이며 MOTOR의 특성 및 현장 조건에 따라 변경 가능함.

KOREA OCCUPATIONAL SAFETY & HEALTH AGENCY
192.168.11.174 / 2014-07-10 09:38:55

E.O.C.R 권고 SETTING치

* POWER SOURCE : AC 3¢ 440V 60Hz

극동호이스트(주)

HOIST	MOTOR 용량	MOTOR 정격 전류	DRIVE TYPE	E.O.C.R TYPE	권고 SETTING 치			REMARK
					DELAY TIME	OPERATION TIME	CURRENT	
C1 TON	2.4KW x 4P	5.0 A	1 DRAVE	SS-30	3 SEC	1 SEC	5.0 A	
	0.4KW x 4P	1.4 A	1 DRAVE	SS-05	3 SEC	1 SEC	1.4 A	
C2 TON	3.7KW x 4P	8.0 A	1 DRAVE	SS-30	3 SEC	1 SEC	8.0 A	
	0.4KW x 4P	1.4 A	1 DRAVE	SS-05	3 SEC	1 SEC	1.4 A	
C2.5 TON	5.0KW x 4P	10.5 A	1 DRAVE	SS-30	3 SEC	1 SEC	10.5 A	
	1.5KW x 4P	3.7 A	1 DRAVE	SS-05	3 SEC	1 SEC	3.7 A	
C3 TON	5.5KW x 4P	10.5 A	1 DRAVE	SS-30	3 SEC	1 SEC	10.5 A	
	1.5KW x 4P	3.7 A	1 DRAVE	SS-05	3 SEC	1 SEC	3.7 A	
C5 TON	5.5KW x 6P	14.1 A	1 DRAVE	SS-30	3 SEC	1 SEC	14.1 A	
	1.0KW x 6P	3.3 A	1 DRAVE	SS-05	3 SEC	1 SEC	3.3 A	
C7.5	5.5KW x 6P	14.1 A	1 DRAVE	SS-30	3 SEC	1 SEC	14.1 A	
	1.0KW x 6P	3.3 A	1 DRAVE	SS-05	3 SEC	1 SEC	3.3 A	
[illegible]	9.0KW x 8P	22.5 A	1 DRAVE	SS-30	3 SEC	1 SEC	22.5 A	
	1.1KW x 8P	4.0 A	1 DRAVE	SS-05	3 SEC	1 SEC	4.0 A	

NOTE

1. 상기 TABLE의 수치는 권고 SETTING 수치이며 MOTOR의 특성 및 현장 조건에 따라 변경 가능함.

192.168.11.174 / 2014-07-10 09:38:55

불법복제 및 배포금지

불법복제 및 배포금지

E.O.C.R 권고 SETTING치

* POWER SOURCE : AC 3ϕ 460V 60Hz

극동호이스트(주)

HOIST	MOTOR 용량	MOTOR 정격 전류	DRIVE TYPE	E.O.C.R TYPE	권고 SETTING 치 DELAY TIME	권고 SETTING 치 OPERATION TIME	권고 SETTING 치 CURRENT	REMARK
[illegible] TON	2.4KW x 4P	4.8 A	1 DRAVE	SS-30	3 SEC	1 SEC	4.8 A	
	0.4KW x 4P	1.4 A	1 DRAVE	SS-05	3 SEC	1 SEC	1.4 A	
[illegible] TON	3.7KW x 4P	7.7 A	1 DRAVE	SS-30	3 SEC	1 SEC	7.7 A	
	0.4KW x 4P	1.4 A	1 DRAVE	SS-05	3 SEC	1 SEC	1.4 A	
C2.[illegible] TON	5.0KW x 4P	10.0 A	1 DRAVE	SS-30	3 SEC	1 SEC	10.0 A	
	1.5KW x 4P	3.5 A	1 DRAVE	SS-05	3 SEC	1 SEC	3.5 A	
C3 TON	5.5KW x 4P	10.0 A	1 DRAVE	SS-30	3 SEC	1 SEC	10.0 A	
	1.5KW x 4P	3.5 A	1 DRAVE	SS-05	3 SEC	1 SEC	3.5 A	
C5 TON	5.5KW x 6P	13.5 A	1 DRAVE	SS-30	3 SEC	1 SEC	13.5 A	
	1.0KW x 6P	3.2 A	1 DRAVE	SS-05	3 SEC	1 SEC	3.2 A	
C7.5 [illegible]	5.5KW x 6P	13.5 A	1 DRAVE	SS-30	3 SEC	1 SEC	13.5 A	
	1.0KW x 6P	3.2 A	1 DRAVE	SS-05	3 SEC	1 SEC	3.2 A	
[illegible]	9.0KW x 8P	21.5 A	1 DRAVE	SS-30	3 SEC	1 SEC	21.5 A	
	1.1KW x 8P	4.[illegible] A	1 DRAVE	SS-05	3 SEC	1 SEC	4.0 A	

NOTE

1. 상기 TABLE의 수치는 권고 SETTING 수치이며 MOTOR의 특성 및 현장 조건에 따라 변경 가능함.

산업재해예방 안전보건공단
KOREA OCCUPATIONAL SAFETY & HEALTH AGENCY
192.168.11.174 / 2014-07-10 09:38:55

불법복제 및 배포금지

E.O.C.R 권고 SETTING치

* POWER SOURCE : AC 3Φ 480V 60Hz

극동호이스트(주)

HOIST	MOTOR 용량	MOTOR 정격 전류	DRIVE TYPE	E.O.C.R TYPE	권고 SETTING 치			REMARK
					DELAY TIME	OPERATION TIME	CURRENT	
C[illegible] TON	2.4KW x 4P	4.6 A	1 DRAVE	SS-30	3 SEC	1 SEC	4.6 A	
	0.4KW x 4P	1.4 A	1 DRAVE	SS-05	3 SEC	1 SEC	1.4 A	
C[illegible] TON	3.7KW x 4P	7.3 A	1 DRAVE	SS-30	3 SEC	1 SEC	7.3 A	
	0.4KW x 4P	1.4 A	1 DRAVE	SS-05	3 SEC	1 SEC	1.4 A	
C[illegible] TON	5.0KW x 4P	9.6 A	1 DRAVE	SS-30	3 SEC	1 SEC	9.6 A	
	1.5KW x 4P	3.4 A	1 DRAVE	SS-05	3 SEC	1 SEC	3.4 A	
C3 TON	5.5KW x 4P	9.6 A	1 DRAVE	SS-30	3 SEC	1 SEC	9.6 A	
	1.5KW x 4P	3.4 A	1 DRAVE	SS-05	3 SEC	1 SEC	3.4 A	
C5 TON	5.5KW x 6P	12.9 A	1 DRAVE	SS-30	3 SEC	1 SEC	12.9 A	
	1.0KW x 6P	3.1 A	1 DRAVE	SS-05	3 SEC	1 SEC	3.1 A	
C7.5	5.5KW x 6P	12.9 A	1 DRAVE	SS-30	3 SEC	1 SEC	12.9 A	
	1.0KW x 6P	[illegible]	1 DRAVE	SS-05	3 SEC	1 SEC	3.1 A	
[illegible]	[illegible].0KW x 8P	[illegible]	1 DRAVE	SS-30	3 SEC	1 SEC	20.6 A	
	1.1KW x 8P	4.0 A	1 DRAVE	SS-05	3 SEC	1 SEC	4.0 A	

NOTE
1. 상기 TABLE의 수치는 권고 SETTING 수치이며 MOTOR의 특성 및 현장 조건에 따라 변경 가능함.

KOREA OCCUPATIONAL SAFETY & HEALTH AGENCY
192.168.11.174 / 2014-07-10 09:38:55

불법복제 및 배포금지

THREE PHASE INDUCTION MOTOR DATE SHEET

SCHEDULE OF TECHNICAL DATA

1. SERVICE	HOISTING
2. MANUFACTURE	극동호이스트(주)
3. FRAME NUMBER	112 S
4. RATED POWER	2.4 KW x 4 P
5. RATED VOLTAGE AND FREQUENCY	220 V 60 Hz
6. MOTOR TYPE	SQUIRREL CAGE ROTOR TYPE
7. SERVICE FACTOR AND RATTING	1 . 0 , 30 MIN
8. LOCATION AND INSULATION CLASS	INDOOR, OUTDOOR, B CLASS
9. DESIGN TRMPERATURE RISE(BY RESISTANCE)	80 ℃
10. FULL LOAD SPEED	1692 RPM
11. FULL LOAD CURRENT	10 A
12. STARTING CURRENT AT RATED VOLTAGE	59 A
13. MINIMUM STARTING VOLTAGE	200 V
14. EFFICIENCY AT 100% RATED LOAD	75 %
15. POWER FACTOR AT 100% RATED LOAD	7 %
16. STARTING TORQUE	.88 KG.M
17. SITE ALTTITUDE(UNDER)	1000 M
18. ENCLOSURE & COOLING METHOD	T E N V
19. TYPE OF BEARING	PL : 6206zz OPL : 6206zz
20. MOUNTING	H Z O N T A L
21. MAXIMUM AMBIENT TEMPERURE	/
22. BEARING LUBRICATION	G E S E
23. STARTING METHOD	F U L L V O L T A G E

한국산업안전보건공단
KOREA OCCUPATIONAL SAFETY & HEALTH AGENCY
192.168.11.174 / 2014-07-10 09:33:55

불법복제 및 배포금지

THREE PHASE INDUCTION MOTOR DATE SHEET

SCHEDULE OF TECHNICAL DATA

1. SERVICE	HOISTING
2. MANUFACTURE	극동호이스트(주)
3. FRAME NUMBER	112 S
4. RATED POWER	2.4 KW x 4 P
5. RATED VOLTAGE AND FREQUENCY	380 V 60 Hz
6. MOTOR TYPE	SQUIRREL CAGE ROTOR TYPE
7. SERVICE FACTOR AND RATTING	1 . 0 , 30 MIN
8. LOCATION AND INSULATION CLASS	INDOOR, OUTDOOR, B CLASS
9. DESIGN TRMPERATURE RISE(BY RESISTANCE)	80 ℃
10. FULL LOAD SPEED	1692 RPM
11. FULL LOAD CURRENT	5.8 A
12. STARTING CURRENT AT RATED VOLTAGE	34.2 A
13. MINIMUM STARTING VOLTAGE	345 V
14. EFFICIENCY AT 100% RATED LOAD	75 %
15. POWER FACTOR AT 100% RATED LOAD	7[illegible] %
16. STARTING TORQUE	[illegible]88 KG.M
17. SITE ALTTITUDE(UNDER)	1000 M
18. ENCLOSURE & COOLING METHOD	TENV
19. TYPE OF BEARING	PL : 6206zz OPL : 6206zz
20. MOUNTING	H[illegible]ZONTAL
21. MAXIMUM AMBIENT TEMPURE	4[illegible]
22. BEARING LUBRICATION	GR[illegible]SE
23. STARTING METHOD	FULL VOLTAGE

192.168.11.174 / 2014-07-10 09:38:55

불법복제 및 배포금지

THREE PHASE INDUCTION MOTOR DATE SHEET

SCHEDULE OF TECHNICAL DATA

1. SERVICE	HOISTING
2. MANUFACTURE	극동호이스트(주)
3. FRAME NUMBER	112 S
4. RATED POWER	2.4 KW x 4 P
5. RATED VOLTAGE AND FREQUENCY	440 V 60 Hz
6. MOTOR TYPE	SQUIRREL CAGE ROTOR TYPE
7. SERVICE FACTOR AND RATTING	1.0 , 30 MIN
8. LOCATION AND INSULATION CLASS	INDOOR, OUTDOOR, B CLASS
9. DESIGN TRMPERATURE RISE(BY RESISTANCE)	80 ℃
10. FULL LOAD SPEED	1692 RPM
11. FULL LOAD CURRENT	5.0 A
12. STARTING CURRENT AT RATED VOLTAGE	29.5 A
13. MINIMUM STARTING VOLTAGE	400 V
14. EFFICIENCY AT 100% RATED LOAD	75 %
15. POWER FACTOR AT 100% RATED LOAD	7[illegible] %S
16. STARTING TORQUE	2.88 KG.M
17. SITE ALTTITUDE(UNDER)	1000 M
18. ENCLOSURE & COOLING METHOD	T E N V
19. TYPE OF BEARING	PL : 6206zz OPL : 6206zz
20. MOUNTING	H[illegible]ZONTAL
21. MAXIMUM AMBIENT TEMPURE	[illegible]
22. BEARING LUBRICATION	G[illegible]SE
23. STARTING METHOD	FULL VOLTAGE

192.168.11.174 / 2014-07-10 09:38:55

불법복제 및 배포금지

THREE PHASE INDUCTION MOTOR DATE SHEET

SCHEDULE OF TECHNICAL DATA

1. SERVICE	HOISTING
2. MANUFACTURE	극동호이스트(주)
3. FRAME NUMBER	112 S
4. RATED POWER	2.4 KW x 4 P
5. RATED VOLTAGE AND FREQUENCY	460 V 60 Hz
6. MOTOR TYPE	SQUIRREL CAGE ROTOR TYPE
7. SERVICE FACTOR AND RATTING	1 . 0 , 30 MIN
8. LOCATION AND INSULATION CLASS	INDOOR, OUTDOOR, B CLASS
9. DESIGN TRMPERATURE RISE(BY RESISTANCE)	80 ℃
10. FULL LOAD SPEED	1692 RPM
11. FULL LOAD CURRENT	4.8 A
12. STARTING CURRENT AT RATED VOLTAGE	28.3 A
13. MINIMUM STARTING VOLTAGE	418 V
14. EFFICIENCY AT 100% RATED LOAD	75 %
15. POWER FACTOR AT 100% RATED LOAD	77 %
16. STARTING TORQUE	2.88 KG.M
17. SITE ALTTITUDE(UNDER)	1000 M
18. ENCLOSURE & COOLING METHOD	T E N V
19. TYPE OF BEARING	PL : 6206zz OPL : 6206zz
20. MOUNTING	H O R I Z O N T A L
21. MAXIMUM AMBIENT TEMPURE	40
22. BEARING LUBRICATION	G R E A S E
23. STARTING METHOD	F U L L V O L T A G E

192.168.11.174 / 2014-07-10 09:38:55

불법복제 및 배포금지

THREE PHASE INDUCTION MOTOR DATE SHEET

SCHEDULE OF TECHNICAL DATA

1. SERVICE	HOISTING
2. MANUFACTURE	극동호이스트(주)
3. FRAME NUMBER	112 S
4. RATED POWER	2.4 KW x 4 P
5. RATED VOLTAGE AND FREQUENCY	480 V 60 Hz
6. MOTOR TYPE	SQUIRREL CAGE ROTOR TYPE
7. SERVICE FACTOR AND RATTING	1.0 , 30 MIN
8. LOCATION AND INSULATION CLASS	INDOOR, OUTDOOR, B CLASS
9. DESIGN TRMPERATURE RISE(BY RESISTANCE)	80 ℃
10. FULL LOAD SPEED	1692 RPM
11. FULL LOAD CURRENT	4.6 A
12. STARTING CURRENT AT RATED VOLTAGE	27.1 A
13. MINIMUM STARTING VOLTAGE	438 V
14. EFFICIENCY AT 100% RATED LOAD	75 %
15. POWER FACTOR AT 100% RATED LOAD	7[illegible] %
16. STARTING TORQUE	2.8[illegible] KG.M
17. SITE ALTTITUDE(UNDER)	1000 M
18. ENCLOSURE & COOLING METHOD	T E N V
19. TYPE OF BEARING	PL : 6206zz OPL : 6206zz
20. MOUNTING	H[illegible]IZONTAL
21. MAXIMUM AMBIENT TEMPURE	[illegible]
22. BEARING LUBRICATION	G[illegible]SE
23. STARTING METHOD	FULL VOLTAGE

한국산업안전보건공단
192.168.11.174 / 2014-07-10 09:38:55

불법복제 및 배포금지

THREE PHASE INDUCTION MOTOR DATE SHEET

SCHEDULE OF TECHNICAL DATA

1. SERVICE	CREEP HOISTING
2. MANUFACTURE	극동호이스트(주)
3. FRAME NUMBER	80
4. RATED POWER	0.4 KW x 4 P
5. RATED VOLTAGE AND FREQUENCY	220 V 60 Hz
6. MOTOR TYPE	SQUIRREL CAGE ROTOR TYPE
7. SERVICE FACTOR AND RATTING	1.0 , 30 MIN
8. LOCATION AND INSULATION CLASS	INDOOR, OUTDOOR, B CLASS
9. DESIGN TRMPERATURE RISE(BY RESISTANCE)	80 ℃
10. FULL LOAD SPEED	1692 RPM
11. FULL LOAD CURRENT	2.7 A
12. STARTING CURRENT AT RATED VOLTAGE	14.2 A
13. MINIMUM STARTING VOLTAGE	300 V
14. EFFICIENCY AT 100% RATED LOAD	63.5 %
15. POWER FACTOR AT 100% RATED LOAD	61.5 %
16. STARTING TORQUE	0.7 KG.M
17. SITE ALTTITUDE(UNDER)	1000 M
18. ENCLOSURE & COOLING METHOD	T E N V
19. TYPE OF BEARING	PL : 6205zz OPL : 6204zz
20. MOUNTING	H[illegible]ZONTAL
21. MAXIMUM AMBIENT TEMPURE	[illegible]
22. BEARING LUBRICATION	GR[illegible]SE
23. STARTING METHOD	FULL VOLTAGE

192.168.11.174 / 2014-07-10 09:35:55

불법복제 및 배포금지

THREE PHASE INDUCTION MOTOR DATE SHEET

SCHEDULE OF TECHNICAL DATA

1. SERVICE	CREEP HOISTING
2. MANUFACTURE	극동호이스트(주)
3. FRAME NUMBER	80
4. RATED POWER	0.4 KW x 4 P
5. RATED VOLTAGE AND FREQUENCY	380 V 60 Hz
6. MOTOR TYPE	SQUIRREL CAGE ROTOR TYPE
7. SERVICE FACTOR AND RATTING	1.0 , 30 MIN
8. LOCATION AND INSULATION CLASS	INDOOR, OUTDOOR, B CLASS
9. DESIGN TRMPERATURE RISE(BY RESISTANCE)	80 ℃
10. FULL LOAD SPEED	1692 RPM
11. FULL LOAD CURRENT	1.6 A
12. STARTING CURRENT AT RATED VOLTAGE	8.3 A
13. MINIMUM STARTING VOLTAGE	343 V
14. EFFICIENCY AT 100% RATED LOAD	63.5 %
15. POWER FACTOR AT 100% RATED LOAD	6[illegible].5 %
16. STARTING TORQUE	0.7 KG.M
17. SITE ALTTITUDE(UNDER)	1000 M
18. ENCLOSURE & COOLING METHOD	T E N V
19. TYPE OF BEARING	PL : 6205zz OPL : 6204zz
20. MOUNTING	H[illegible]ZONTAL
21. MAXIMUM AMBIENT TEMPURE	[illegible]
22. BEARING LUBRICATION	G[illegible]SE
23. STARTING METHOD	FULL VOLTAGE

192.168.11.174 / 2014-07-10 09:38:55

불법복제 및 배포금지

THREE PHASE INDUCTION MOTOR DATE SHEET

SCHEDULE OF TECHNICAL DATA

1. SERVICE	CREEP HOISTING
2. MANUFACTURE	극동호이스트(주)
3. FRAME NUMBER	80
4. RATED POWER	0.4 KW x 4 P
5. RATED VOLTAGE AND FREQUENCY	440 V 60 Hz
6. MOTOR TYPE	SQUIRREL CAGE ROTOR TYPE
7. SERVICE FACTOR AND RATTING	1.0 , 30 MIN
8. LOCATION AND INSULATION CLASS	INDOOR, OUTDOOR, B CLASS
9. DESIGN TRMPERATURE RISE(BY RESISTANCE)	80 ℃
10. FULL LOAD SPEED	1692 RPM
11. FULL LOAD CURRENT	1.4 A
12. STARTING CURRENT AT RATED VOLTAGE	7.1 A
13. MINIMUM STARTING VOLTAGE	400 V
14. EFFICIENCY AT 100% RATED LOAD	63.5 %
15. POWER FACTOR AT 100% RATED LOAD	61.5 %
16. STARTING TORQUE	0.7 KG.M
17. SITE ALTTITUDE(UNDER)	1000 M
18. ENCLOSURE & COOLING METHOD	T E N V
19. TYPE OF BEARING	PL : 6205zz OPL : 6204zz
20. MOUNTING	H ZONTAL
21. MAXIMUM AMBIENT TEMPURE	4
22. BEARING LUBRICATION	G R SE
23. STARTING METHOD	FULL VOLTAGE

192.168.11.174 / 2014-07-10 09:38:55

불법복제 및 배포금지

THREE PHASE INDUCTION MOTOR DATE SHEET

SCHEDULE OF TECHNICAL DATA

1. SERVICE	CREEP HOISTING
2. MANUFACTURE	극동호이스트(주)
3. FRAME NUMBER	80
4. RATED POWER	0.4 KW x 4 P
5. RATED VOLTAGE AND FREQUENCY	460 V 60 Hz
6. MOTOR TYPE	SQUIRREL CAGE ROTOR TYPE
7. SERVICE FACTOR AND RATTING	1.0 , 30 MIN
8. LOCATION AND INSULATION CLASS	INDOOR, OUTDOOR, B CLASS
9. DESIGN TRMPERATURE RISE(BY RESISTANCE)	80 ℃
10. FULL LOAD SPEED	1692 RPM
11. FULL LOAD CURRENT	1.3 A
12. STARTING CURRENT AT RATED VOLTAGE	6.8 A
13. MINIMUM STARTING VOLTAGE	418 V
14. EFFICIENCY AT 100% RATED LOAD	63.5 %
15. POWER FACTOR AT 100% RATED LOAD	61.5 %
16. STARTING TORQUE	0.7 KG.M
17. SITE ALTTITUDE(UNDER)	1000 M
18. ENCLOSURE & COOLING METHOD	T E N V
19. TYPE OF BEARING	PL : 6205zz OPL : 6204zz
20. MOUNTING	H Z O N T A L
21. MAXIMUM AMBIENT TEMPURE	40
22. BEARING LUBRICATION	G R S E
23. STARTING METHOD	F U L L V O L T A G E

192.168.11.174 / 2014-07-10 09:38:55

불법복제 및 배포금지

THREE PHASE INDUCTION MOTOR DATE SHEET

SCHEDULE OF TECHNICAL DATA

1. SERVICE	CREEP HOISTING
2. MANUFACTURE	극동호이스트(주)
3. FRAME NUMBER	80
4. RATED POWER	0.4 KW x 4 P
5. RATED VOLTAGE AND FREQUENCY	480 V 60 Hz
6. MOTOR TYPE	SQUIRREL CAGE ROTOR TYPE
7. SERVICE FACTOR AND RATTING	1 . 0 , 30 MIN
8. LOCATION AND INSULATION CLASS	INDOOR, OUTDOOR, B CLASS
9. DESIGN TRMPERATURE RISE(BY RESISTANCE)	80 ℃
10. FULL LOAD SPEED	1692 RPM
11. FULL LOAD CURRENT	1.2 A
12. STARTING CURRENT AT RATED VOLTAGE	6.6 A
13. MINIMUM STARTING VOLTAGE	436 V
14. EFFICIENCY AT 100% RATED LOAD	63.5 %
15. POWER FACTOR AT 100% RATED LOAD	61.5 %
16. STARTING TORQUE	0.7 KG.M
17. SITE ALTTITUDE(UNDER)	1000 M
18. ENCLOSURE & COOLING METHOD	T E N V
19. TYPE OF BEARING	PL : 6205zz OPL : 6204zz
20. MOUNTING	H Z O N T A L
21. MAXIMUM AMBIENT TEMPURE	4[illegible]
22. BEARING LUBRICATION	G R S E
23. STARTING METHOD	F U L L V O L T A G E

192.168.11.174 / 2014-07-10 09:38:55

불법복제 및 배포금지

THREE PHASE INDUCTION MOTOR DATE SHEET

SCHEDULE OF TECHNICAL DATA

1. SERVICE	TRAVERSING
2. MANUFACTURE	극동호이스트 (주)
3. FRAME NUMBER	90 S
4. RATED POWER	0.75 KW x 4 P
5. RATED VOLTAGE AND FREQUENCY	220 V 60 Hz
6. MOTOR TYPE	SQUIRREL CAGE ROTOR TYPE
7. SERVICE FACTOR AND RATTING	1 . 0 , 30 MIN
8. LOCATION AND INSULATION CLASS	INDOOR, OUTDOOR, B CLASS
9. DESIGN TRMPERATURE RISE(BY RESISTANCE)	80 ℃
10. FULL LOAD SPEED	1760 RPM
11. FULL LOAD CURRENT	4.1 A
12. LOCKED ROTOR CURRENT	22.1 A
13. MINIMUM STARTING VOLTAGE	200 V
14. EFFICIENCY AT 100% RATED LOAD	66 %
15. POWER FACTOR AT 100% RATED LOAD	73.5 %
16. FULL LOAD TORQUE	1.92 KG.M
17. SITE ALTTITUDE(UNDER)	1000 M
18. ENCLOSURE & COOLING METHOD	T E N V
19. TYPE OF BEARING	PL : 6205zz GPL : 6204zz
20. MOUNTING	H O R I Z O N T A L
21. MAXIMUM AMBIENT TEMPURE	℃
22. BEARING LUBRICATION	G R E A S E
23. STARTING METHOD	F U L L V O L T A G E

산업재해예방
안전보건공단
KOREA OCCUPATIONAL SAFETY & HEALTH AGENCY
192.168.11.174 / 2014-07-10 09:38:55

불법복제 및 배포금지

THREE PHASE INDUCTION MOTOR DATE SHEET

SCHEDULE OF TECHNICAL DATA

1.SERVICE	TRAVERSING
2. MANUFACTURE	극동호이스트 (주)
3. FRAME NUMBER	90 S
4. RATED POWER	0.75 KW x 4 P
5. RATED VOLTAGE AND FREQUENCY	380 V 60 Hz
6. MOTOR TYPE	SQUIRREL CAGE ROTOR TYPE
7. SERVICE FACTOR AND RATTING	1 . 0 , 30 MIN
8. LOCATION AND INSULATION CLASS	INDOOR, OUTDOOR, B CLASS
9. DESIGN TRMPERATURE RISE(BY RESISTANCE)	80 ℃
10. FULL LOAD SPEED	1760 RPM
11. FULL LOAD CURRENT	2.4 A
12. LOCKED ROTOR CURRENT	12.8 A
13. MINIMUM STARTING VOLTAGE	345 V
14. EFFICIENCY AT 100% RATED LOAD	66 %
15. POWER FACTOR AT 100% RATED LOAD	73.5 %
16. FULL LOAD TORQUE	1.02 KG.M
17. SITE ALTTITUDE(UNDER)	1000 M
18. ENCLOSURE & COOLING METHOD	T E N V
19. TYPE OF BEARING	PL : 6205zz DE : 6204zz
20. MOUNTING	H O R I Z O N T A L
21. MAXIMUM AMBIENT TEMPURE	℃
22. BEARING LUBRICATION	GREASE
23. STARTING METHOD	F U L L V O L T A G E

한국산업안전보건공단
산업재해예방
안전보건공단
KOREA OCCUPATIONAL SAFETY & HEALTH AGENCY
192.168.11.174 / 2014-07-10 09:33:55

불법복제 및 배포금지

THREE PHASE INDUCTION MOTOR DATE SHEET

SCHEDULE OF TECHNICAL DATA

1. SERVICE	TRAVERSING
2. MANUFACTURE	극동호이스트 (주)
3. FRAME NUMBER	90 S
4. RATED POWER	0.75 KW x 4 P
5. RATED VOLTAGE AND FREQUENCY	440 V 60 Hz
6. MOTOR TYPE	SQUIRREL CAGE ROTOR TYPE
7. SERVICE FACTOR AND RATTING	1.0 , 30 MIN
8. LOCATION AND INSULATION CLASS	INDOOR, OUTDOOR, B CLASS
9. DESIGN TRMPERATURE RISE(BY RESISTANCE)	80 ℃
10. FULL LOAD SPEED	1760 RPM
11. FULL LOAD CURRENT	2.0 A
12. LOCKED ROTOR CURRENT	11.1 A
13. MINIMUM STARTING VOLTAGE	400 V
14. EFFICIENCY AT 100% RATED LOAD	66 %
15. POWER FACTOR AT 100% RATED LOAD	73.5 %
16. FULL LOAD TORQUE	1.02 KG.M
17. SITE ALTTITUDE(UNDER)	1000 M
18. ENCLOSURE & COOLING METHOD	T E N V
19. TYPE OF BEARING	PL : 6205zz OPL : 6204zz
20. MOUNTING	H O R I Z O N T A L
21. MAXIMUM AMBIENT TEMPURE	℃
22. BEARING LUBRICATION	G R E A S E
23. STARTING METHOD	F U L L V O L T A G E

산업재해예방
안전보건공단
KOREA OCCUPATIONAL SAFETY & HEALTH AGENCY

192.168.11.174 / 2014-07-10 09:38:55

불법복제 및 배포금지

THREE PHASE INDUCTION MOTOR DATE SHEET

SCHEDULE OF TECHNICAL DATA

1. SERVICE	TRAVERSING
2. MANUFACTURE	극동호이스트 (주)
3. FRAME NUMBER	90 S
4. RATED POWER	0.75 KW x 4 P
5. RATED VOLTAGE AND FREQUENCY	460 V 60 Hz
6. MOTOR TYPE	SQUIRREL CAGE ROTOR TYPE
7. SERVICE FACTOR AND RATTING	1 . 0 , 30 MIN
8. LOCATION AND INSULATION CLASS	INDOOR, OUTDOOR, B CLASS
9. DESIGN TRMPERATURE RISE(BY RESISTANCE)	80 ℃
10. FULL LOAD SPEED	1760 RPM
11. FULL LOAD CURRENT	2.0 A
12. LOCKED ROTOR CURRENT	10.6 A
13. MINIMUM STARTING VOLTAGE	418 V
14. EFFICIENCY AT 100% RATED LOAD	66 %
15. POWER FACTOR AT 100% RATED LOAD	75.5 %
16. FULL LOAD TORQUE	1.02 KGM
17. SITE ALTTITUDE(UNDER)	1000 M
18. ENCLOSURE & COOLING METHOD	T E N V
19. TYPE OF BEARING	PL : 6205zz OPL : 6204zz
20. MOUNTING	H O R I Z O N T A L
21. MAXIMUM AMBIENT TEMPURE	℃
22. BEARING LUBRICATION	F
23. STARTING METHOD	F U L L V O L T A G E

산업재해예방
안전보건공단
KOREA OCCUPATIONAL SAFETY & HEALTH AGENCY

192.168.11.174 / 2014-07-10 09:38:55

불법복제 및 배포금지

THREE PHASE INDUCTION MOTOR DATE SHEET

SCHEDULE OF TECHNICAL DATA

1. SERVICE	TRAVERSING
2. MANUFACTURE	극동호이스트 (주)
3. FRAME NUMBER	90 S
4. RATED POWER	0.75 KW x 4 P
5. RATED VOLTAGE AND FREQUENCY	480 V 60 Hz
6. MOTOR TYPE	SQUIRREL CAGE ROTOR TYPE
7. SERVICE FACTOR AND RATTING	1 . 0 , 30 MIN
8. LOCATION AND INSULATION CLASS	INDOOR, OUTDOOR, B CLASS
9. DESIGN TRMPERATURE RISE(BY RESISTANCE)	80 ℃
10. FULL LOAD SPEED	1760 RPM
11. FULL LOAD CURRENT	1.9 A
12. LOCKED ROTOR CURRENT	10.2 A
13. MINIMUM STARTING VOLTAGE	436 V
14. EFFICIENCY AT 100% RATED LOAD	66 %
15. POWER FACTOR AT 100% RATED LOAD	73.5 %
16. FULL LOAD TORQUE	1.02 KG.M
17. SITE ALTTITUDE(UNDER)	1000 M
18. ENCLOSURE & COOLING METHOD	T E N V
19. TYPE OF BEARING	PL : 6205zz OPL : 6204zz
20. MOUNTING	H O R I Z O N T A L
21. MAXIMUM AMBIENT TEMPURE	℃
22. BEARING LUBRICATION	F
23. STARTING METHOD	F U L L V O L T A G E

산업재해예방
안전보건공단
KOREA OCCUPATIONAL SAFETY & HEALTH AGENCY
192.168.11.174 / 2014-07-10 09:30:55

불법복제 및 배포금지

THREE PHASE INDUCTION MOTOR DATE SHEET

SCHEDULE OF TECHNICAL DATA

1. SERVICE	TRAVERSING
2. MANUFACTURE	극동호이스트 (주)
3. FRAME NUMBER	90 S
4. RATED POWER	0.5 KW x 6 P
5. RATED VOLTAGE AND FREQUENCY	220 V 60 Hz
6. MOTOR TYPE	SQUIRREL CAGE ROTOR TYPE
7. SERVICE FACTOR AND RATTING	1 . 0 , 30 MIN
8. LOCATION AND INSULATION CLASS	INDOOR, OUTDOOR, B CLASS
9. DESIGN TRMPERATURE RISE(BY RESISTANCE)	80 ℃
10. FULL LOAD SPEED	1160 RPM
11. FULL LOAD CURRENT	3.4 A
12. LOCKED ROTOR CURRENT	16.4 A
13. MINIMUM STARTING VOLTAGE	200 V
14. EFFICIENCY AT 100% RATED LOAD	64 %
15. POWER FACTOR AT 100% RATED LOAD	59.5 %
16. FULL LOAD TORQUE	0.80 KGM
17. SITE ALTTITUDE(UNDER)	1000 M
18. ENCLOSURE & COOLING METHOD	T E N V
19. TYPE OF BEARING	PL : 6205zz OPP : 6204zz
20. MOUNTING	H O R I Z O N T A L
21. MAXIMUM AMBIENT TEMPURE	℃
22. BEARING LUBRICATION	GREASE
23. STARTING METHOD	F U L L V O L T A G E

한국산업안전보건공단
산업재해예방
안전보건공단
KOREA OCCUPATIONAL SAFETY & HEALTH AGENCY
192.168.11.174 / 2014-07-10 09:38:55

불법복제 및 배포금지

THREE PHASE INDUCTION MOTOR DATE SHEET

SCHEDULE OF TECHNICAL DATA

1. SERVICE	TRAVERSING
2. MANUFACTURE	극동호이스트 (주)
3. FRAME NUMBER	90 S
4. RATED POWER	0.5 KW x 6 P
5. RATED VOLTAGE AND FREQUENCY	380 V 60 Hz
6. MOTOR TYPE	SQUIRREL CAGE ROTOR TYPE
7. SERVICE FACTOR AND RATTING	1 . 0 , 30 MIN
8. LOCATION AND INSULATION CLASS	INDOOR, OUTDOOR, B CLASS
9. DESIGN TRMPERATURE RISE(BY RESISTANCE)	80 ℃
10. FULL LOAD SPEED	1160 RPM
11. FULL LOAD CURRENT	2.0 A
12. LOCKED ROTOR CURRENT	9.5 A
13. MINIMUM STARTING VOLTAGE	345 V
14. EFFICIENCY AT 100% RATED LOAD	64 %
15. POWER FACTOR AT 100% RATED LOAD	55 %
16. FULL LOAD TORQUE	0.30 KG.M
17. SITE ALTTITUDE(UNDER)	1000 M
18. ENCLOSURE & COOLING METHOD	T E N V
19. TYPE OF BEARING	PL : 6205zz OTL : 6204zz
20. MOUNTING	H O R I Z O N T A L
21. MAXIMUM AMBIENT TEMPURE	℃
22. BEARING LUBRICATION	G R E A S E
23. STARTING METHOD	F U L L V O L T A G E

산업재해예방
안전보건공단
KOREA OCCUPATIONAL SAFETY & HEALTH AGENCY
192.168.11.174 / 2014-07-10 09:38:55

불법복제 및 배포금지

THREE PHASE INDUCTION MOTOR DATE SHEET

SCHEDULE OF TECHNICAL DATA

1. SERVICE	TRAVERSING
2. MANUFACTURE	극동호이스트 (주)
3. FRAME NUMBER	90 S
4. RATED POWER	0.5 KW x 6 P
5. RATED VOLTAGE AND FREQUENCY	440 V 60 Hz
6. MOTOR TYPE	SQUIRREL CAGE ROTOR TYPE
7. SERVICE FACTOR AND RATTING	1 . 0 , 30 MIN
8. LOCATION AND INSULATION CLASS	INDOOR, OUTDOOR, B CLASS
9. DESIGN TRMPERATURE RISE(BY RESISTANCE)	80 ℃
10. FULL LOAD SPEED	1160 RPM
11. FULL LOAD CURRENT	1.7 A
12. LOCKED ROTOR CURRENT	8.2 A
13. MINIMUM STARTING VOLTAGE	400 V
14. EFFICIENCY AT 100% RATED LOAD	64 %
15. POWER FACTOR AT 100% RATED LOAD	55.5 %
16. FULL LOAD TORQUE	0.80 KG.M
17. SITE ALTTITUDE(UNDER)	1000 M
18. ENCLOSURE & COOLING METHOD	T E N V
19. TYPE OF BEARING	PL : 6205zz OPL : 6204zz
20. MOUNTING	H O R I Z O N T A L
21. MAXIMUM AMBIENT TEMPURE	℃
22. BEARING LUBRICATION	F
23. STARTING METHOD	F U L L V O L T A G E

검사필
한국산업안전보건공단
산업재해예방
안전보건공단
KOREA OCCUPATIONAL SAFETY & HEALTH AGENCY
192.168.11.174 / 2014-07-10 08:38:55

불법복제 및 배포금지

THREE PHASE INDUCTION MOTOR DATE SHEET

SCHEDULE OF TECHNICAL DATA

1. SERVICE	TRAVERSING
2. MANUFACTURE	극동호이스트 (주)
3. FRAME NUMBER	90 S
4. RATED POWER	0.5 KW x 6 P
5. RATED VOLTAGE AND FREQUENCY	460 V 60 Hz
6. MOTOR TYPE	SQUIRREL CAGE ROTOR TYPE
7. SERVICE FACTOR AND RATTING	1 . 0 , 30 MIN
8. LOCATION AND INSULATION CLASS	INDOOR, OUTDOOR, B CLASS
9. DESIGN TRMPERATURE RISE(BY RESISTANCE)	80 ℃
10. FULL LOAD SPEED	1160 RPM
11. FULL LOAD CURRENT	1.7 A
12. LOCKED ROTOR CURRENT	7.9 A
13. MINIMUM STARTING VOLTAGE	418 V
14. EFFICIENCY AT 100% RATED LOAD	64 %
15. POWER FACTOR AT 100% RATED LOAD	59.5 %
16. FULL LOAD TORQUE	0.80 KG.M
17. SITE ALTTITUDE(UNDER)	1000 M
18. ENCLOSURE & COOLING METHOD	T E N V
19. TYPE OF BEARING	PL : 6205zz OPL : 6204zz
20. MOUNTING	H O R I Z O N T A L
21. MAXIMUM AMBIENT TEMPURE	℃
22. BEARING LUBRICATION	GREASE
23. STARTING METHOD	F U L L V O L T A G E

검사필
한국산업안전보건공단
산업재해예방
안전보건공단
KOREA OCCUPATIONAL SAFETY & HEALTH AGENCY
192.168.11.174 / 2014-07-10 09:38:55

불법복제 및 배포금지

THREE PHASE INDUCTION MOTOR DATE SHEET

SCHEDULE OF TECHNICAL DATA

1. SERVICE	TRAVERSING
2. MANUFACTURE	극동호이스트 (주)
3. FRAME NUMBER	90 S
4. RATED POWER	0.5 KW x 6 P
5. RATED VOLTAGE AND FREQUENCY	480 V 60 Hz
6. MOTOR TYPE	SQUIRREL CAGE ROTOR TYPE
7. SERVICE FACTOR AND RATTING	1 . 0 , 30 MIN
8. LOCATION AND INSULATION CLASS	INDOOR, OUTDOOR, B CLASS
9. DESIGN TRMPERATURE RISE(BY RESISTANCE)	80 ℃
10. FULL LOAD SPEED	1160 RPM
11. FULL LOAD CURRENT	1.6 A
12. LOCKED ROTOR CURRENT	7.5 A
13. MINIMUM STARTING VOLTAGE	436 V
14. EFFICIENCY AT 100% RATED LOAD	64 %
15. POWER FACTOR AT 100% RATED LOAD	55.5 %
16. FULL LOAD TORQUE	0.80 KG.M
17. SITE ALTTITUDE(UNDER)	1000 M
18. ENCLOSURE & COOLING METHOD	T E N V
19. TYPE OF BEARING	PL : 6205zz OPL : 6204zz
20. MOUNTING	H O R I Z O N T A L
21. MAXIMUM AMBIENT TEMPURE	℃
22. BEARING LUBRICATION	GREASE
23. STARTING METHOD	FULL VOLTAGE

산업재해예방 안전보건공단
KOREA OCCUPATIONAL SAFETY & HEALTH AGENCY
192.168.11.174 / 2014-07-10 09:38:55

불법복제 및 배포금지

KISWIRE

CERT NO. 200703WRU59900 DATE *Oct. 26, 2010*

MILL TEST CERTIFICATE

THIS IS TO CERTIFY THAT THE MATERIAL DESCRIBED BELOW WAS MANUFACTURED IN ACCORDANCE WITH KISWIRE LTD SPECIFICATION AND APPLICABLE SECTIONS

OF KSD 3514 - 2002 (B Grade)

TO MESSRS

MATERIAL DESCRIPTION UNGALVANIZED STEEL WIRE ROPE

06 X 19 (SL) + FC 1000 M X 5 REEL

EX NO. 1W4264

ORDER NO. REEL NO. 1 ~ 5 SAMPLING NO. 1

DIAMETER OF ROPE 6.000 mm TYPE OF CORE Fiber Core

SPECIFIED BREAKING LOAD 20.90 kN SAMPLE BROKE AT 26.78 kN

WT. OF ZINC COATING OF OUTER WIRE MIN. 0.000 g/m²

ROPE LAY RHRL LAY LENGTH 38.6 mm

LUBRICATION A-2

CHEMICAL ANALYSIS OF WIRE ROD

CHARGE NO.	C X 100	Si X 100	Mn X 100	P X 1000	S X 1000
SA51859	72	21	69	11	3

DATE OF SAMPLE TEST *Jan. 21, 2010*

Approved by Q.C Manager H.S. SONG
KISWIRE LTD., KOREA

KS JIS API ABS KR NK. G.Lloyd ✓ BV

산업재해예방
안전보건공단
KOREA OCCUPATIONAL SAFETY & HEALTH AGENCY
192.168.11.174 / 2014-07-10 09:38:55

불법복제 및 배포금지

SUB VENDOR LIST

구분	NO	DESCRIPTION	SUB VENDOR	TEL NO.	REMARK
기계	1	WIRE ROPE	만호 로우프(주)	051-332-3131	
			고려제강 (주)	02-776-4131	
	2	MAGNET CORE	극동호이스트(주)	031-491-5311	
	3	DRUM	극동호이스트(주)	031-491-5311	
	4	GEAR	극동호이스트(주)	031-491-5311	
	5	HOOK ASS'Y	제 일 단 철	032-527-2817	
			대 흥 단 조	032-561-0541	
	6	MIDDLE SHAFT	극동호이스트(주)	031-491-5311	
	7	RAIL CHANNEL ANGLE	인천제철(주)	032-763-5000	
			강원산업(주)	032-756-8881	
전기	8	MAG CONTACTOR	L.G 전선 (주)	02-273-4140	전 품
			(주) 대 륙	02-242-41[illegible]	한국공업협회
			(주) 대성디[illegible]스	055-338-3125	
	9	E.O.C.R	삼화기[illegible] (주)	032-62-1331	[illegible].S
			아산 전기	02-2636-8035	
	10	PUSH BUTTON	한영전[illegible] (주	02-742-0430	전 품
			(주)케이지 오토	02-247-3131	[illegible] 품
			반도기계 (주)	031-495-8352-4	전 품
	11	LOAD LIMITER	보 창 기 전	032-431-0150	산 안 검
			반도기계 (주)	03[illegible]5-8353-4	산 안 검
			정호 엔지니어링	0[illegible]553	산 안 검
	12	SILICON	반도기계 (주)	03[illegible]5-8353-4	
			아산 전기	02-2636-8035	
			보 창 기 전	032-431-0150	

산업재해예방
안전보건공단
KOREA OCCUPATIONAL SAFETY AND HEALTH AGENCY
192.168.11.174 / 2014-07-10 09:38:55

불법복제 및 배포금지

EN 60 947-5-1			
Clause	Requirement – Test	Result - Remark	Verdict

	Annex C of IEC 60947-1	P

Annex C	**Degree of protection of enclosed control circuit-devices**		P
C.1	**Scope**		
	This annex applies to degrees of protection of enclosed switchgear and control gear at rated voltages not exceeding 1000 V a.c. or 1500 V d.c. hereafter referred as "equipment"		
C.2	**Object**		
	Clause 2 of IEC 60529 applies with additional requirements of this annex		
C.3	**Definitions**		
	Clause 3 of IEC 60529 applies except that "Enclosure" is replaced by the following:		
	"A part providing a specified degree of protection of equipment against certain external influences and a specified degree of protection against approach to or contact with live parts and moving parts"		
C.4	**Designation**		
	Clause 4 of IEC 60529 applies except for letters H, M and S		N/A
C.5	**Degrees of protection against access to hazardous parts and against ingress of solid foreign objects indicated by the first characteristic numeral**		
	Clause 5 of IEC 60529 applies	6	P
C.6	**Degrees of protection against ingress of water indicated by the second characteristic numeral**		
	Clause 6 of IEC 60529 applies	5	P
C.7	**Degrees of protection against access to hazardous parts indicated by the additional letter**		N/A
	Clause7 of IEC 60529 applies		N/A
C.8	**Supplementary letters**		N/A
	Clause 8 of IEC 60529 applies		N/A
C.9	**Examples of designations with IP Code**		P
	Clause 9 of IEC 60529 applies		P
C.10	**Marking**		P

C.4, C.6 항이 IP65 PASS를 첨부.

산업재해예방 안전보건공단 KOREA OCCUPATIONAL SAFETY & HEALTH AGENCY

192.168.11.174 / 2014-07-10 09:38:55